FAIRCHILD SEMICONDUCTOR®

IntelliMAX™ Advanced Load Switches

www.fairchildsemi.com/intellimax

Fairchild's Offering

Fairchild's IntelliMAX family of integrated load switches support the latest generations of mobile and consumer electronic devices. The IntelliMAX family combines conventional MOSFET performance with a unique combination of protection, control and fault monitoring features to enhance power management design. This level of integration helps designers achieve efficiency and reliability, while minimizing board space requirements.

Applications

- Portable devices such as mobile phones, PDAs, digital cameras, MP3 players and portable bar code readers
- Inventory management terminals and portable enterprise equipment
- Portable gaming, keyboards and keypads
- GPS systems and wireless data systems
- Set-top boxes, DVD players and consumer electronics
- Low-voltage industrial, telecom and medical equipment
- Computing
- USB on-the-go
- Hard disk drive

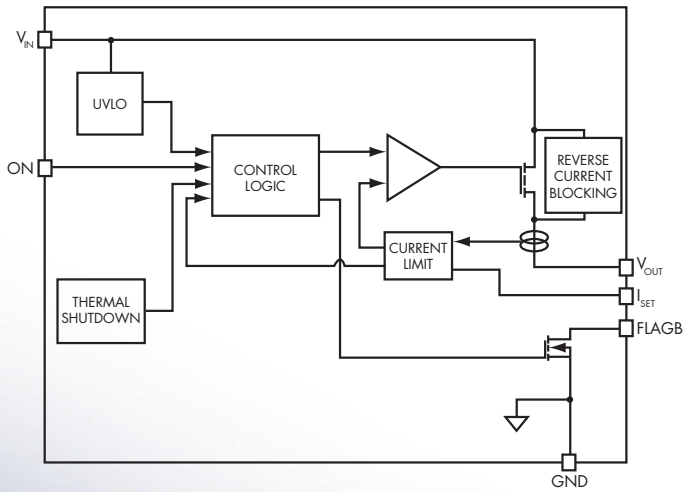

Representative Block Diagram, Please Refer to the Data Sheet for Specific I/O Information

To request IntelliMAX samples or evaluation boards, please contact your local Fairchild sales office or visit:
www.fairchildsemi.com/cf/sales_contacts

Saving our world, 1mW at a time™

FAIRCHILD SEMICONDUCTOR®

IntelliMAX Advanced Load Switches

www.fairchildsemi.com/intellimax

Fixed – Current Limit

Product Number	R_{ON} Typ. (mΩ)	Feature Set															Output Discharge	On-Pin Behavior	Package
		V_{MIN}	V_{MAX}	SR	SR Time (µS)	Under Voltage Lockout	Thermal Shutdown	Fault Flag	Over Current Protection	Current Limit Min. (mA)	Current Blanking	Fault Behavior: Auto Restart	Fault Behavior: Shutdown	Fault Behavior: Constant Current	Reverse Current Blocking	P_{GOOD}			
FPF2000	700	1.8	5.5	•	10	•	•	•	•	50	•	•	–	–	–	–	–	Hi	SC-70
FPF2001	700	1.8	5.5	•	10	•	•	•	•	50	•	•	–	–	–	–	–	Lo	SC-70
FPF2004	700	1.8	5.5	•	10	•	•	•	•	100	•	•	–	–	–	–	–	Hi	SC-70
FPF2005	700	1.8	5.5	•	10	•	•	•	•	100	•	•	–	–	–	–	–	Lo	SC-70
FPF2024	210	1.6	5.5	•	30	•	•	•	•	100	•	•	–	–	–	–	–	Hi	WL-CSP 1x1.5
FPF2025	210	1.6	5.5	•	30	•	•	•	•	100	•	•	–	–	–	–	–	Lo	WL-CSP 1x1.5
FPF2100	125	1.8	5.5	•	12	•	•	•	•	200	•	•	–	–	–	–	–	Hi	SOT-23
FPF2101	125	1.8	5.5	•	12	•	•	•	•	200	•	•	–	–	–	–	–	Lo	SOT-23
FPF2104	125	1.8	5.5	•	12	•	•	•	•	400	•	•	–	–	–	–	–	Hi	SOT-23
FPF2105	125	1.8	5.5	•	12	•	•	•	•	400	•	•	–	–	–	–	–	Lo	SOT-23
FPF2116	125	1.8	5.5	•	12	•	•	•	•	200	•	•	–	–	•	–	–	Hi	SOT-23
FPF2140	110	1.8	5.5	•	10	•	•	•	•	200	•	•	–	–	•	•	–	Hi	MLP 2x2
FPF2144	110	1.8	5.5	•	10	•	•	•	•	400	•	•	–	–	•	•	–	Hi	MLP 2x2
FPF2200	140	1.8	5.5	•	40	•	•	•	•	500	•	•	–	–	–	–	•	Hi	MLP 2x2
FPF2002	700	1.8	5.5	•	10	•	•	•	•	50	•	–	–	–	–	–	–	Hi	SC-70
FPF2006	700	1.8	5.5	•	10	•	•	•	•	100	•	–	•	–	–	–	–	Hi	SC-70
FPF2026	210	1.6	5.5	•	30	•	•	•	•	100	•	–	•	–	–	–	–	Hi	WL-CSP 1x1.5
FPF2102	125	1.8	5.5	•	12	•	•	•	•	200	•	–	•	–	–	–	–	Hi	SOT-23
FPF2106	125	1.8	5.5	•	12	•	•	•	•	400	•	–	•	–	–	–	–	Hi	SOT-23
FPF2108	125	1.8	5.5	•	12	•	•	•	•	400	•	–	•	–	•	–	–	Lo	SOT-23
FPF2172	125	1.8	5.5	•	13	•	•	•	•	200	•	–	•	–	•	–	–	Hi	MLP 3x3
FPF2174	125	1.8	5.5	•	14	•	•	•	•	200	•	–	•	–	•	–	–	Hi	MLP 3x3
FPF2142	110	1.8	5.5	•	10	•	•	•	•	200	•	–	•	–	•	•	–	Hi	MLP 2x2
FPF2146	110	1.8	5.5	•	10	•	•	•	•	400	•	–	•	–	•	•	–	Hi	MLP 2x2
FPF2201	140	1.8	5.5	•	40	•	•	•	•	500	•	–	•	–	–	–	•	Hi	MLP 2x2
FPF2003	700	1.8	5.5	•	10	•	•	•	•	50	–	–	–	•	–	–	–	Hi	SC-70
FPF2007	700	1.8	5.5	•	10	•	•	•	•	100	–	–	–	•	–	–	–	Hi	SC-70
FPF2027	210	1.6	5.5	•	30	•	•	•	•	100	–	–	–	•	–	–	–	Hi	WL-CSP 1x1.5
FPF2103	125	1.8	5.5	•	10	•	•	•	•	200	–	–	–	•	–	–	–	Hi	SOT-23
FPF2107	125	1.8	5.5	•	10	•	•	•	•	400	–	–	–	•	–	–	–	Hi	SOT-23
FPF2109	125	1.8	5.5	•	10	•	•	•	•	200	–	–	–	•	•	–	–	Hi	SOT-23
FPF2110	125	1.8	5.5	•	10	•	•	•	•	400	–	–	–	•	•	–	–	Hi	SOT-23
FPF2143	110	1.8	5.5	•	10	•	•	•	•	200	–	–	–	•	•	•	–	Hi	MLP 2x2
FPF2148	110	1.8	5.5	•	10	•	•	•	•	200	–	–	–	•	•	•	–	Lo	MLP 2x2
FPF2147	110	1.8	5.5	•	10	•	•	•	•	400	–	–	–	•	•	•	–	Hi	MLP 2x2
FPF2202	140	1.8	5.5	•	40	•	•	•	•	500	–	–	–	•	–	–	•	Hi	MLP 2x2

User Adjustable Current Limit

Product Number	R_{ON} Typ. (mΩ)	Feature Set															Output Discharge	On-Pin Behavior	Package
		V_{MIN}	V_{MAX}	SR	SR Time (µS)	Under Voltage Lockout	Thermal Shutdown	Fault Flag	Over Current Protection	Current Limit		Current Blanking	Fault Behavior			Reverse Current Blocking			
										Min. (mA)	Max. (mA)		Auto Restart	Shutdown	Constant Current				
FPF2213	250	1.8	5.5	•	40	•	•	•	•	100	250	•	•	–	–	–	•	HI	MLP 2x2
FPF2214	250	1.8	5.5	•	40	•	•	•	•	100	250	•	–	•	–	–	•	HI	MLP 2x2
FPF2215	250	1.8	5.5	•	40	•	•	•	•	100	250	–	–	–	•	–	•	HI	MLP 2x2
FPF2223	140	1.8	5.5	•	40	•	•	•	•	250	650	•	•	–	–	–	•	HI	MLP 2x2
FPF2224	140	1.8	5.5	•	40	•	•	•	•	250	650	•	–	•	–	–	•	HI	MLP 2x2
FPF2225	140	1.8	5.5	•	40	•	•	•	•	250	650	–	–	–	•	–	•	HI	MLP 2x2
FPF2123	125	1.8	5.5	•	10	•	•	•	•	150	1500	•	•	–	–	•	–	HI	SOT-23
FPF2124	125	1.8	5.5	•	10	•	•	•	•	150	1500	•	–	•	–	•	–	HI	SOT-23
FPF2125	125	1.8	5.5	•	10	•	•	•	•	150	1500	•	–	–	–	•	–	HI	SOT-23
FPF2163	120	1.8	5.5	•	10	•	•	•	•	150	1500	•	•	–	–	•	–	HI	MLP 2x2
FPF2193	75	1.8	5.5	•	20	•	•	•	•	150	1500	•	•	–	–	•	–	HI	WL-CSP 1x1.5
FPF2164	120	1.8	5.5	•	10	•	•	•	•	150	1500	•	–	•	–	•	–	HI	MLP 2x2
FPF2194	75	1.8	5.5	•	20	•	•	•	•	150	1500	•	–	•	–	•	–	HI	WL-CSP 1x1.5
FPF2165	120	1.8	5.5	•	10	•	•	•	•	150	1500	–	–	–	•	•	–	HI	MLP 2x2
FPF2195	75	1.8	5.5	•	20	•	•	•	•	150	1500	–	–	–	•	•	–	HI	WL-CSP 1x1.5

Slew Rate

Product Number	SR	SR Time (µS)	R_{ON} Typ. (mΩ)	V_{MIN}	V_{MAX}	Output Discharge	On-Pin Behavior	Package
FPF1013	•	30	17	0.8	2.5	–	HI	WL-CSP 1x1.5
FPF1014	•	30	17	0.8	2.5	•	HI	WL-CSP 1x1.5
FPF1015	•	30	35	0.8	2.5	–	HI	MLP 2x2
FPF1016	•	30	35	0.8	2.5	•	Hi	MLP 2x2
FPF1017	•	150	35	0.8	2.5	–	HI	MLP 2x2
FPF1018	•	150	35	0.8	2.5	•	HI	MLP 2x2
FPF1003A	•	10	20	1.2	5.5	–	HI	WL-CSP 1x1.5
FPF1004	•	10	20	1.2	5.5	•	HI	WL-CSP 1x1.5
FPF1005	•	10	50	1.2	5.5	–	HI	MLP 2x2
FPF1006	•	10	50	1.2	5.5	•	HI	MLP 2x2
FPF1007	•	10	30	1.2	5.5	•	HI	MLP 2x2
FPF1008	•	80	30	1.2	5.5	•	HI	MLP 2x2
FPF1009	•	1000	30	1.2	5.5	•	HI	MLP 2x2

Key Terminology:

Over Current Limit Protection (OCP): The over current protection feature prevents excessive current, and triggers one of three fault conditions:

- Auto Restart: the part will automatically shutdown and attempt to restart at the defined "auto restart time" interval until the fault is cleared.
- Shutdown: the part will automatically shutdown and requires a power cycle on the "ON" pin to clear the fault.
- Constant Current: the part will limit the current to the fixed or user-defined value.

Reverse Current Blocking Protection: The reverse current function prevents current from flowing from the load to the source.

Slew Rate Control, Soft Start: The slew rate control feature turns the switch on over a defined period of time, which limits the current through the device and into the load. When balanced with the load capacitance this feature helps to prevent current spikes on the load and minimize voltage sags on the input.

Output Discharge: The output discharge switch turns on when the main switch is turned off, offering quick and safe discharge of the load capacitance.

Thermal Shut Down Protection: The thermal shutdown protection protects the part from damage due to thermal events. The threshold is 140°C, with 10°C hysteresis.

UVLO (Under Voltage Lock Out): The under voltage lock out function will turn the switch off if the input voltage drops below a threshold. This ensures stable operation of the device.

Blanking Time: The blanking time is a set period of time where faults are ignored to avoid unnecessary shut down (i.e. due to transient events).

Fault Flag: The fault flag provides information as to the fault state of the device.

Power Good (P_{GOOD}): The power good feature is an open-drain pin that provides a signal to indicate when V_{OUT} exceeds 90% of the input voltage.

IntelliMAX Packaging Technology

Package Height Max. (mm)	Package Type				
	WL-CSP 1x1.5 (1mmx1.5mm)	MLP 2x2 (2mmx2mm)	SC-70 (2mmx2mm)	MLP 3x3 (3mmx3mm)	SOT-23 (3mmx3mm)
1.4					
1					
0.8					
0.65					
0.55					

For more information on IntelliMAX, please visit: www.fairchildsemi.com/IntelliMAX