Preliminary and Provisional

2-CHANNLE SWITCHING REGULATOR

Features

- Complete PWM Power Control Circuitry
- Precision Reference：2.5V±1% (25 °C)
- Under-voltage Lockout Protection
- Open Drain Output
- Output Short Circuit Protection
- Low Dissipation Current：1.6mA
- Dead Time Control：0 to 100%
- Wide Operating Frequency：
  10kHz to 800kHz
- VDD range：4.0V to 14V

Pin Configuration

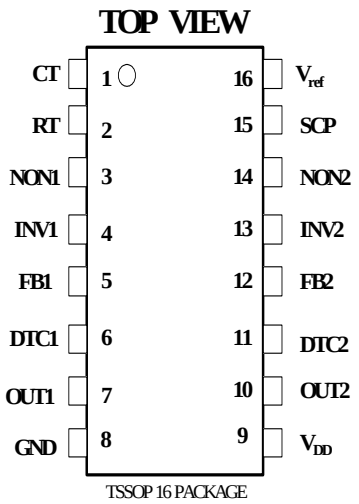

General Description

The AAT1343 provides an integrated two-channel pulse-width-modulation (PWM) solution for the power supply of DC-DC system, this device offers the systems engineer the flexibility to tailor the power supply circuitry to a specific application. Each channel contains its own error amplifier, PWM comparator, dead–time control and output driver. The under-voltage protection, oscillator, short circuit protection and voltage reference circuit are common for the two channels.

Both channel of AAT1343 can be used for DC/DC converter operations including step-up, step-down, and inverting. Dead-time control (DTC) can be set to provide 0% to 100% dead time by resistive divider network. Soft start can be implemented by paralleling the DTC resistor with a capacitor. Two dead time control inputs are assigned for Ch-1 and Ch-2 individually, and dead time control inputs can be used to control on / off operation.

With a minimum number of external components, the AAT1343 offers a simple and cost effective solution.

*Spec is subject to change without notice in this document.

Pin Description

Pin #	Name	I/O	Description
1	CT	I	External timing capacitance
2	RT	I	External timing resistance
3	NON1	I	Positive input for error amplifier 1
4	INV1	I	Negative input for error amplifier 1
5	FB1	I	Output for error amplifier 1
6	DTC1	I	Output 1 dead time / soft start setting
7	OUT1	O	Output 1
8	GND		Ground
9	V_{DD}	I	Power supply
10	OUT2	O	Output 2
11	DTC2	I	Output 2 dead time / soft start setting
12	FB2	I	Output for error amplifier 2
13	INV2	I	Negative input for error amplifier 2
14	NON2	I	Positive input for error amplifier 2
15	SCP	I	Timer latch setting
16	V_{ref}	O	Reference voltage (2.5V) output

Absolute Maximum Ratings

CHARACTERISTICS	SYMBOL	VALUE	UNIT
Supply voltage	V_{DD}	14	V
Input voltage (IN-, DTC)	V_I	V_{DD}	V
Output voltage	V_O	V_{DD} +0.3	V
Output current	I_O	120	mA
Operating free-air temperature range	T_{ope}	-20 to 85	^oC
Storage temperature range	T_{stg}	-65 to 150	^oC
Power dissipation	Pd	500	mW

Recommended Operating Conditions

	Symbol	Min	Max	Unit
Supply voltage, V_{DD}	V_{DD}	4.0	14	V
Input voltage, IN1, IN2	Vcm	0.5	1.6	V
Output voltage	V_O	0	V_{DD}	V
OSC capacitor	C_T	100	15000	pF
OSC resistor (Note 1)	R_T	5.1	50	kΩ
Oscillator frequency	f_{OSC}	10	800	kHz
Output current, Iout1, Iout2	I_O		100	mA
Operating free-air temperature	T_{ope}	-20	85	^oC

Electrical Characteristics, V_{DD} = 6.0V (Unless Otherwise Specified) (See Note 1)

Oscillator

Parameter		Test Condition	Min	Typ	Max	Unit
Frequency	f_{OSC}	C_T = 220pF, R_T = 10kΩ	320	400	480	KHz
Frequency change with V_{DD}	f_{dV}	V_{DD} = 4.0V to 14.0V, T_A = 25 °C C_T = 220pF, R_T = 10kΩ		1		%

Under-voltage Protection

Parameter		Test Condition	Min	Typ	Max	Unit
Upper threshold voltage	V_{UPH}	T_A = 25 °C	2.6	2.9	3.2	V
Lower threshold voltage	V_{UPL}	T_A = 25 °C	2.23	2.53	2.83	V
Hysteresis (V_{UPH} – V_{UPL})	V_{HYS}	T_A = 25 °C		0.37		V

Short Circuit Protection Control

Parameter		Test Condition	Min	Typ	Max	Unit
Input threshold voltage	V_{r1}	Ch-1, 2	0.95	1.05	1.15	V
Short-circuit detect threshold voltage	V_{r2}		1.48	1.64	1.8	V
SCP terminal source current	I_{SCP}		-1.5	-2.5	-3.5	µA
Standy Voltage	V_{STB}			50	100	mV
Latch Voltage	V_{LT}			30	100	mV

Note1 : Typical values of all parameters are specified at T_A =25 °C.

Electrical Characteristics, V_{DD} = 6.0V (Unless Otherwise Specified) (See Note 1) (continued)

Reference Voltage

Parameter		Test Conditions	Min	Typ	Max	Unit
Reference voltage	V_{REF}	I_{REF} = –1mA , T_A = 25 °C	2.48	2.505	2.53	V
						V
Input voltage regulation	V_{RI}	I_{REF} = –1mA , V_{DD} = 4.0V to 14.0V		1	5	mV
Output regulation	V_{RO}	I_{REF} = –0.1mA to -3mA		1	10	mV

EA (Error Amplifier)

Parameter		Test Condition	Min	Typ	Max	Unit
Input offset voltage	V_{IO}	Ch-1,2, Av=1			6	mV
Input bias current	I_{IB}	Ch-1,2		±15	±100	nA
Input voltage range	V_{IR}	Ch-1,2	0.5		1.6	V
Open-loop voltage amplification	A_{VD}		70	85		dB
Output voltage swing	V_{OM+}		2.3	2.5		V
	V_{OM-}			0.7	0.9	
Output sink current	I_{OM+}	FB=1.25V	3	20		mA
Output source current	I_{OM-}	FB=1.25V	-45	-75		µA
Common-mode rejection ratio	CMRR		60	80		dB

Electrical Characteristics, V_{DD} = 6.0V (Unless Otherwise Specified) (See Note 1) (continued)

Dead Time Control & PWM

Parameter		Test Condition	Min	Typ	Max	Unit
Input bias current	I_{BDT}	V_{DTC} = 2V		0.1	1	µA
Input threshold voltage (DTC)	V_{d0}	Duty = 0%, f_{OSC} = 10kHz	1.87	1.97	2.07	V
	V_{d100}	Duty = 100%, f_{OSC} = 10kHz	1.38	1.48	1.58	
Latch input voltage	V_{DT}	I_{DT} = 40µA	2.28	2.48		V
Latch mode source current	I_{DT}	DTC1,2=0V	-200	-560		µA

Output Stage

Parameter		Test Condition	Min	Typ	Max	Unit
Saturation voltage	V_{SAT}	I_O = 75mA（CH-1,2）		0.8	1.2	V
Leakage current	I_{peak}	V_o =14.0V			5	µA

Operating Current

Parameter		Test Condition	Min	Typ	Max	Unit
Supply current	I_{DD-OFF}	Output ”OFF”state		1.3	1.8	mA
	I_{DD-ON}	R_{RT} =10kΩ		1.6	2.3	mA

Function Block Diagram

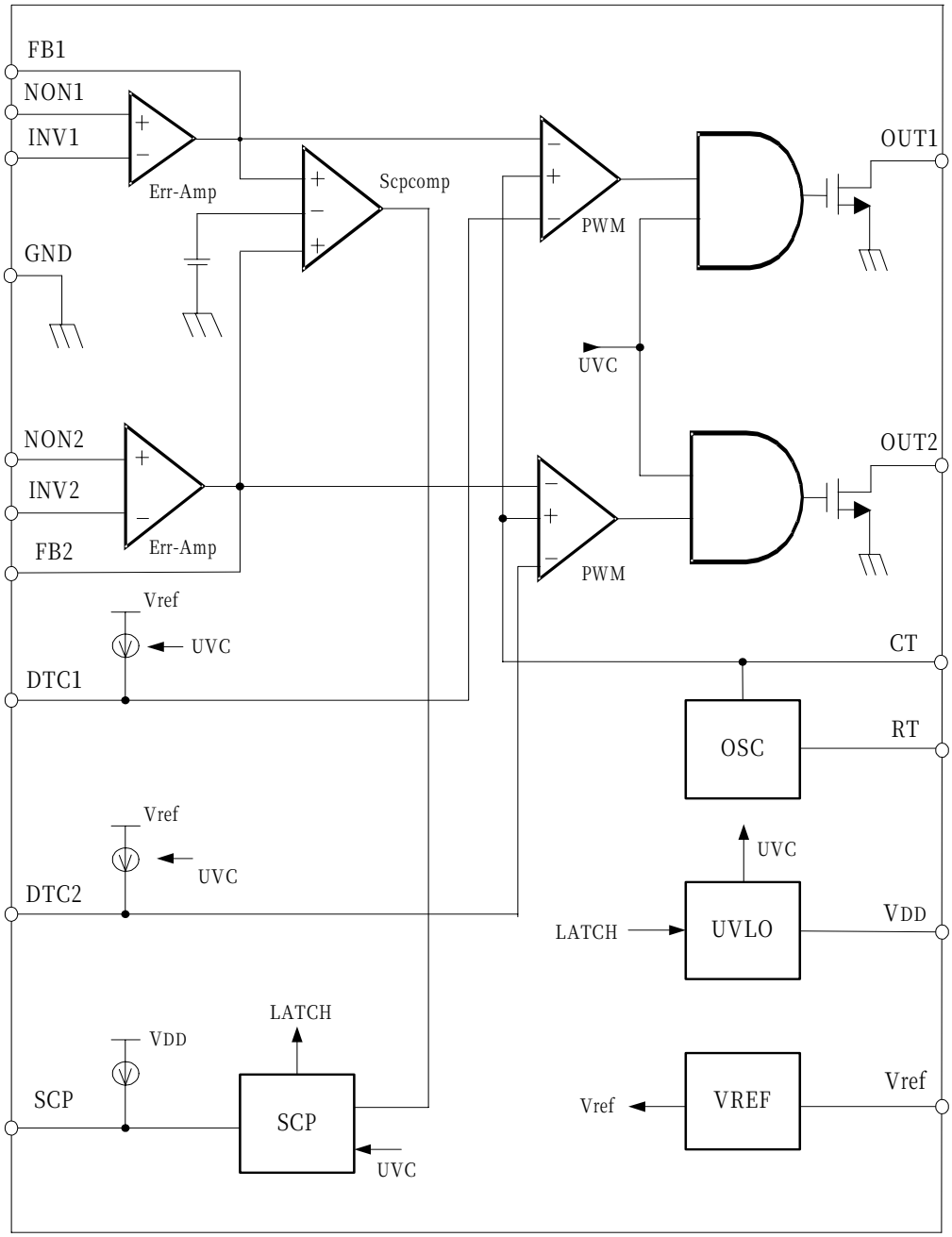

Application Circuit

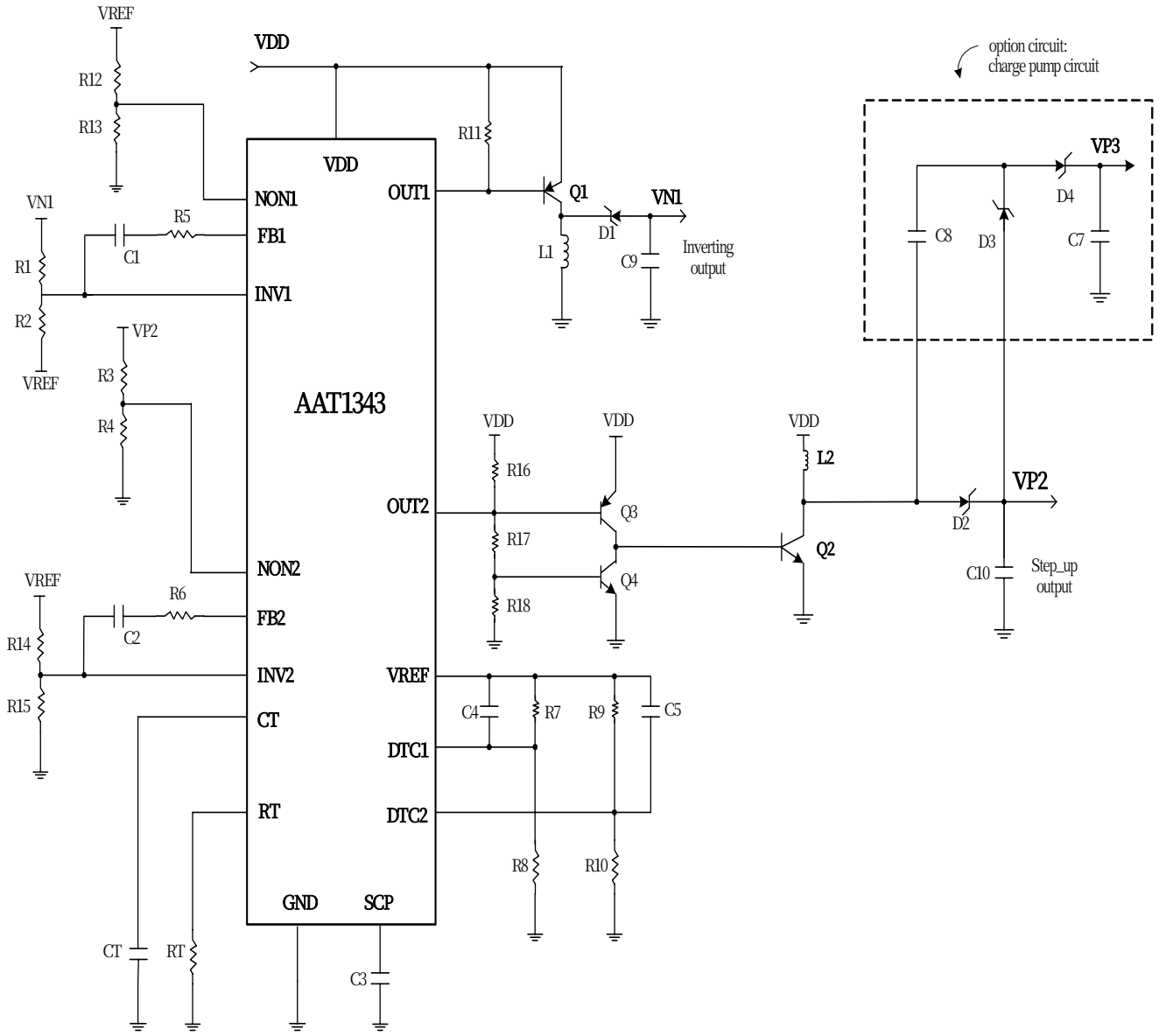

Timing Chart

AAT1343

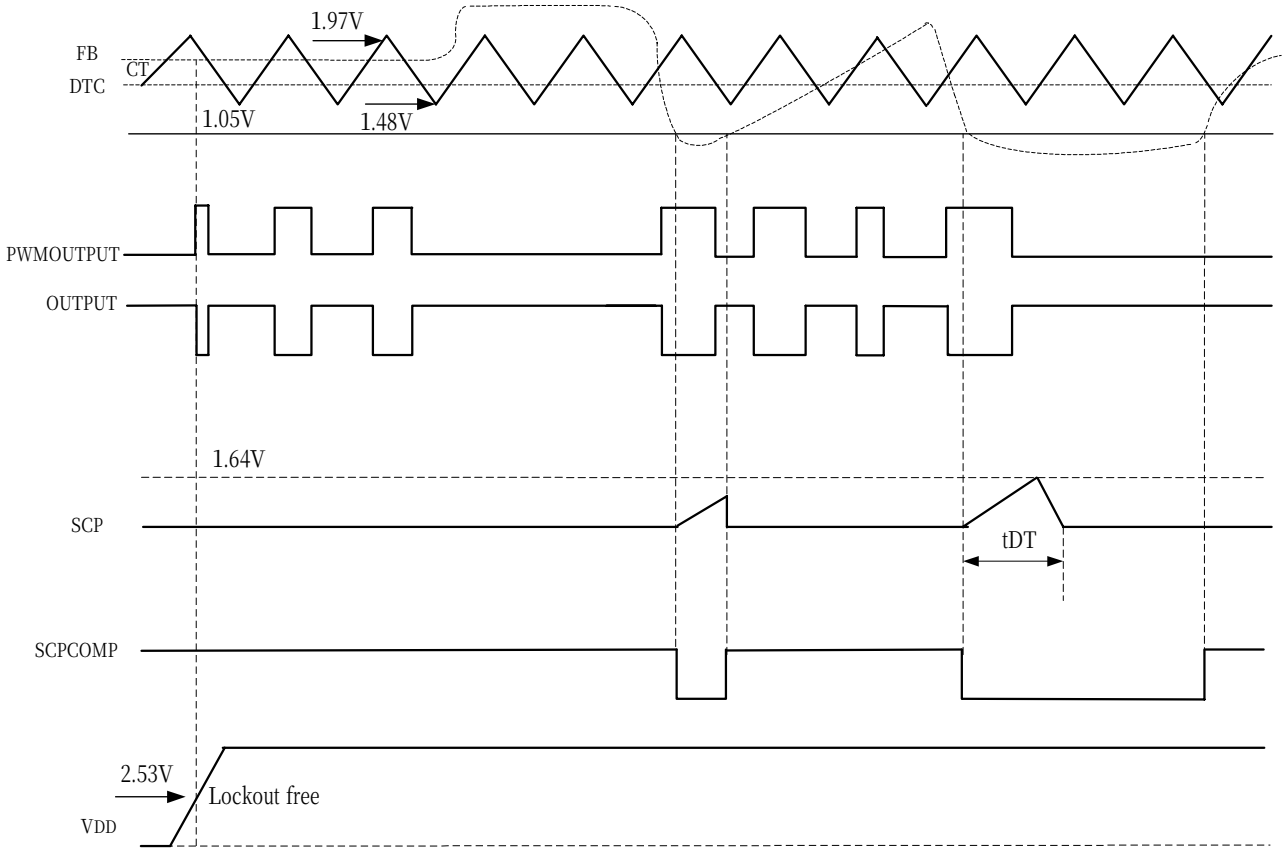

Package Dimension (Unit: Mil)

16-pin TSSOP

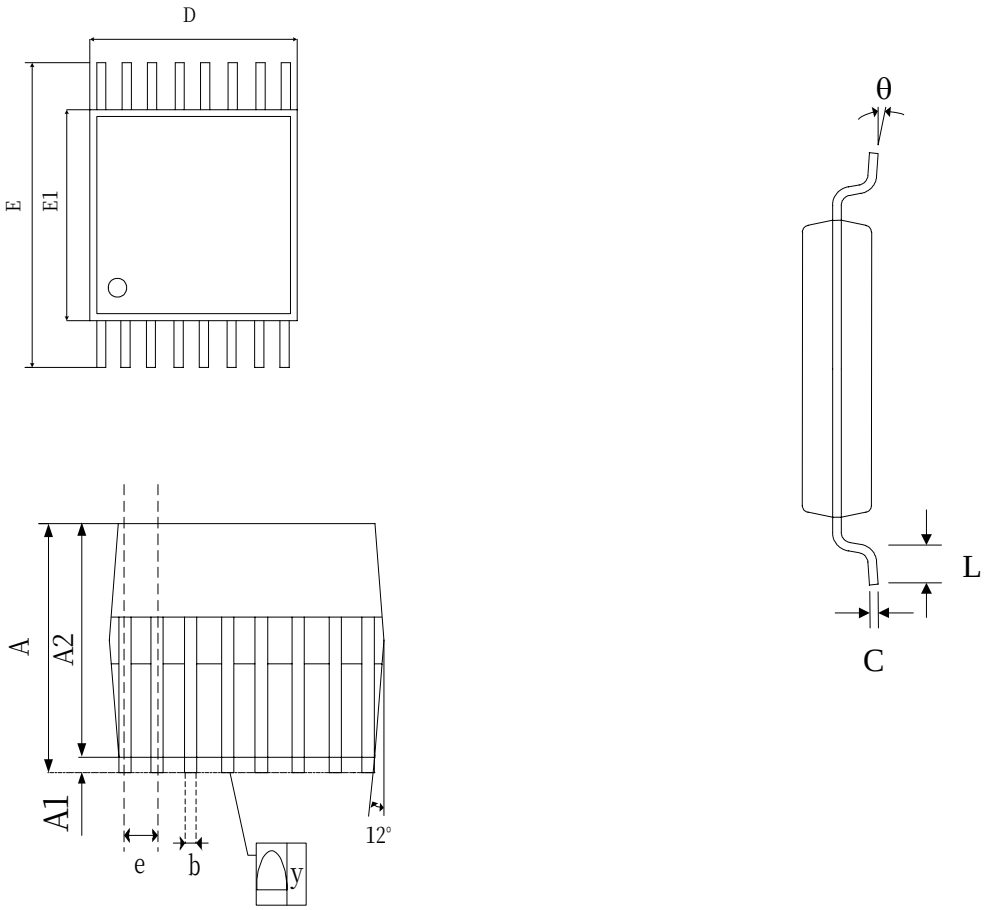

	DIMENSIONS IN MILLIMETERS			DIMENSIONS IN INCHES		
	MIN	NOM	MAX	MIN	NOM	MAX
A	1.05	1.10	1.20	0.041	0.043	0.047
A1	0.05	0.10	0.15	0.002	0.004	0.006
A2	—	1.00	1.05	—	0.039	0.041
b	0.20	0.25	0.28	0.008	0.010	0.011
C	—	0.127	—	—	0.005	—
D	4.90	5.075	5.10	0.193	0.1998	0.200
E	6.20	6.40	6.60	0.244	0.252	0.260
E1	4.30	4.40	4.50	0.170	0.173	0.177
e	—	0.65	—	—	0.026	—
L	0.5	0.60	0.70	0.02	0.024	0.028
y	—	—	0.076	—	—	0.003
Θ	0°	4°	8°	0°	4°	8°

****

NOTE:

1. Controlling dimension : mm
2. Dimension "D" does not include mold flash, the bar burrs and gate burrs.
   Mold flush, the bar burrs and gate burrs shall not exceed 0.006"[0.15mm]
   per end.
   Dimension "E1" does not include interlead flash.
   interlead flash shall not exceed 0.010"[0.25mm] per side.
3. Dimension "b" does not include dambar protrusion.
   Allowable dambar protrusion shall be 0.003"[0.08mm] total in excess of
   the "b" dimension at maximum material condition.
   dambar cannot be located on the lower radius or the foot.
   Minimum space between protrusion and an adjacent lead to be 0.0028"[0.07mm]
4. Tolerance: ± 0.010"[0.25mm] unless otherwise specified.
5. Otherwise dimension follow acceptable spec.

****