SY98002AQNC

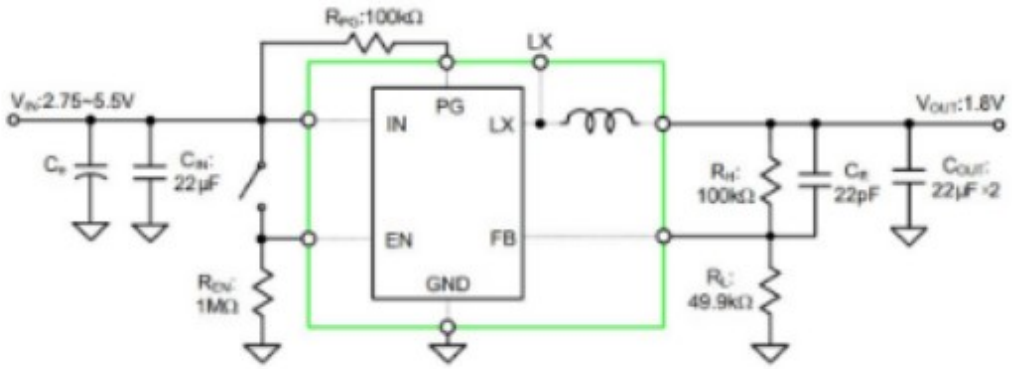

Parameters	Features
Part Number	SY98002AQNC
Vin_min (V)	2.7
Vin_max (V)	5.5
Io_max (A)	2
Vref Accuracy	±1.5%
Efficiency up to	88.7
Fsw (MHz)	3
Iq (uA)	68
Rdson1	40
Rdson2	20
Interface	
Rdson1	40
Rdson2	20
Package	QFN3×3-10