LIS2DM

MEMS digital output motion sensor: ultra low-power high performance 3-axis “femto” accelerometer

Features

- Wide supply voltage, 1.71 V to 3.6 V
- Independent IOs supply (1.8 V) and supply voltage compatible
- Ultra low-power mode consumption down to 2 µA
- ±2*g*/±4*g*/±8*g*/±16*g* dynamically selectable full scale
- I^2C/SPI digital output interface
- 8-bit data output
- 2 independent programmable interrupt generators for free-fall and motion detection
- 6D/4D orientation detection
- “Sleep to wake” and “Return to sleep” function
- Free-fall detection
- Motion detection
- Embedded temperature sensor
- Embedded FIFO
- ECOPACK® RoHS and “Green” compliant

Applications

- Motion activated functions
- Display orientation
- Shake control
- Pedometer
- Gaming and virtual reality input devices
- Impact recognition and logging

Description

The LIS2DM is an ultra low-power high performance 3-axis linear accelerometer belonging to the “femto” family, with digital I^2C/SPI serial interface standard output.

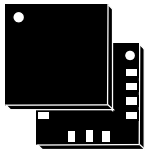

LGA-14 (2.0x2.0x1mm)

The LIS2DM has dynamically user selectable full scales of ±2*g*/±4*g*/±8*g*/±16*g* and it is capable of measuring accelerations with output data rates from 1 Hz to 5.3 kHz.

The self-test capability allows the user to check the functioning of the sensor in the final application.

The device may be configured to generate interrupt signals by two independent inertial wake-up/free-fall events as well as by the position of the device itself.

The LIS2DM is available in a small thin plastic land grid array package (LGA) and is guaranteed to operate over an extended temperature range from -40 °C to +85 °C.

Table 1. Device summary

Order codes	Temperature range [° C]	Package	Packaging
LIS2DM	-40 to +85	LGA-14	Tray
LIS2DMTR	-40 to +85	LGA-14	Tape and reel

Contents

1 Block diagram and pin description 8

1.1 Block diagram 8

1.2 Pin description 8

2 Mechanical and electrical specifications 10

2.1 Mechanical characteristics 10

2.2 Temperature sensor characteristics 11

2.3 Electrical characteristics 11

2.4 Communication interface characteristics 12

2.4.1 SPI - serial peripheral interface 12

2.4.2 I2C - Inter IC control interface 13

2.5 Absolute maximum ratings 14

2.6 Terminology and functionality 15

Terminology 15

2.6.1 Sensitivity 15

2.6.2 Zero-g level 15

Functionality 15

2.6.3 Normal mode 15

2.6.4 Self-test 16

2.6.5 6D / 4D orientation detection 16

2.6.6 “Sleep to wake” and “Return to sleep” 16

2.7 Sensing element 17

2.8 IC interface 17

2.9 Factory calibration 18

2.10 FIFO 18

2.11 Temperature sensor 18

3 Application hints 19

3.1 Soldering information 19

4 Digital main blocks 20

4.1 FIFO 20

4.1.1 Bypass mode 20

4.1.2 FIFO mode 20
4.1.3 Stream mode 20
4.1.4 Stream-to-FIFO mode 20
4.1.5 Retrieve data from FIFO 20

5 Digital interfaces 21
5.1 I2C serial interface 21
5.1.1 I2C operation 22
5.2 SPI bus interface 23
5.2.1 SPI read 25
5.2.2 SPI write 26
5.2.3 SPI read in 3-wires mode 26

6 Register mapping 28

7 Registers Description 30
7.1 STATUS_AUX (07h) 30
7.2 OUT_TEMP_L (0Ch), OUT_TEMP_H (0Dh) 30
7.3 INT_COUNTER (0Eh) 30
7.4 WHO_AM_I (0Fh) 30
7.5 TEMP_CFG_REG (1Fh) 30
7.6 CTRL_REG1 (20h) 31
7.7 CTRL_REG2 (21h) 32
7.8 CTRL_REG3 (22h) 32
7.9 CTRL_REG4 (23h) 33
7.10 CTRL_REG5 (24h) 33
7.11 CTRL_REG6 (25h) 34
7.12 REFERENCE/DATACAPTURE (26h) 34
7.13 STATUS_REG (27h) 35
7.14 FIFO_READ_START (28h) 35
7.15 OUT_X (29h) 35
7.16 OUT_Y (2Bh) 35
7.17 OUT_Z (2Dh) 36
7.18 FIFO_CTRL_REG (2Eh) 36
7.19 FIFO_SRC_REG (2Fh) 36

7.20 INT1_CFG (30h) 36
7.21 INT1_SRC (31h) 37
7.22 INT1_THS (32h) 38
7.23 INT1_DURATION (33h) 38
7.24 INT2_CFG (34h) 39
7.25 INT2_SRC (35h) 40
7.26 INT2_THS (36h) 40
7.27 INT2_DURATION (37h) 41
7.28 CLICK_CFG (38h) 41
7.29 CLICK_SRC (39h) 42
7.30 CLICK_THS (3Ah) 42
7.31 TIME_LIMIT (3Bh) 43
7.32 TIME_LATENCY (3Ch) 43
7.33 TIME WINDOW(3Dh) 43
7.34 Act_THS(3Eh) 43
7.35 Act_DUR (3Fh) 44

8 Package information 45

9 Revision history 46

List of tables

Table 1. Device summary . . . 1
Table 2. Pin description . . . 9
Table 3. Mechanical characteristics . . . 10
Table 4. Temperature sensor characteristics . . . 11
Table 5. Electrical characteristics . . . 11
Table 6. SPI slave timing values . . . 12
Table 7. I2C slave timing values . . . 13
Table 8. Absolute maximum ratings . . . 14
Table 9. Normal mode features . . . 15
Table 10. Current consumption vs. ODR . . . 16
Table 11. Serial interface pin description . . . 21
Table 12. Serial interface pin description . . . 21
Table 13. SAD+read/write patterns . . . 22
Table 14. Transfer when master is writing one byte to slave . . . 22
Table 15. Transfer when master is writing multiple bytes to slave: . . . 23
Table 16. Transfer when master is receiving (reading) one byte of data from slave: . . . 23
Table 17. Transfer when master is receiving (reading) multiple bytes of data from slave . . . 23
Table 18. Register address map . . . 28
Table 19. STATUS_REG_AUX register . . . 30
Table 20. STATUS_REG_AUX description . . . 30
Table 21. INT_COUNTER register . . . 30
Table 22. WHO_AM_I register . . . 30
Table 23. TEMP_CFG_REG register . . . 30
Table 24. TEMP_CFG_REG description . . . 31
Table 25. CTRL_REG1 register . . . 31
Table 26. CTRL_REG1 description . . . 31
Table 27. Data rate configuration . . . 31
Table 28. CTRL_REG2 register . . . 32
Table 29. CTRL_REG2 description . . . 32
Table 30. High pass filter mode configuration . . . 32
Table 31. CTRL_REG3 register . . . 32
Table 32. CTRL_REG3 description . . . 32
Table 33. CTRL_REG4 register . . . 33
Table 34. CTRL_REG4 description . . . 33
Table 35. Self test mode configuration . . . 33
Table 36. CTRL_REG5 register . . . 33
Table 37. CTRL_REG5 description . . . 34
Table 38. CTRL_REG6 register . . . 34
Table 39. CTRL_REG6 description . . . 34
Table 40. REFERENCE register . . . 34
Table 41. REFERENCE register description . . . 35
Table 42. STATUS register . . . 35
Table 43. STATUS register description . . . 35
Table 44. FIFO_CTRL_REG register . . . 36
Table 45. FIFO_CTRL_REG register description . . . 36
Table 46. FIFO mode configuration . . . 36
Table 47. FIFO_SRC register . . . 36
Table 48. INT1_CFG description . . . 36

Table 49. Interrupt mode . . . 37
Table 50. INT1_SRC register . . . 37
Table 51. INT1_SRC description . . . 37
Table 52. INT1_THS register . . . 38
Table 53. INT1_THS description . . . 38
Table 54. INT1_DURATION register . . . 38
Table 55. INT1_DURATION description . . . 38
Table 56. INT2_CFG register . . . 39
Table 57. INT2_CFG description . . . 39
Table 58. Interrupt mode . . . 39
Table 59. INT2_SRC register . . . 40
Table 60. INT2_SRC description . . . 40
Table 61. INT2_THS register . . . 40
Table 62. INT2_THS description . . . 41
Table 63. INT2_DURATION register . . . 41
Table 64. INT2_DURATION description . . . 41
Table 65. CLICK_CFG register . . . 41
Table 66. CLICK_CFG description . . . 41
Table 67. CLICK_SRC register . . . 42
Table 68. CLICK_SRC description . . . 42
Table 69. CLICK_THS register . . . 42
Table 70. CLICK_SRC description . . . 42
Table 71. TIME_LIMIT register . . . 43
Table 72. TIME_LIMIT description . . . 43
Table 73. TIME_LATENCY register . . . 43
Table 74. TIME_LATENCY description . . . 43
Table 75. TIME_WINDOW register . . . 43
Table 76. TIME_WINDOW description . . . 43
Table 77. TIME_WINDOW register . . . 43
Table 78. TIME_WINDOW description . . . 43
Table 79. Act_DUR register . . . 44
Table 80. Act_DUR description . . . 44
Table 81. LGA-14 2x2x1 mechanical dimensions . . . 45
Table 82. Document revision history . . . 46

List of figures

Figure 1. Block diagram 8
Figure 2. Pin connection 8
Figure 3. SPI slave timing diagram 12
Figure 4. I2C Slave timing diagram 13
Figure 5. LIS2DM electrical connection 19
Figure 6. Read and write protocol 24
Figure 7. SPI read protocol 25
Figure 8. Multiple bytes SPI read protocol (2-byte example) 25
Figure 9. SPI write protocol 26
Figure 10. Multiple bytes SPI write protocol (2-byte example) 26
Figure 11. SPI read protocol in 3-wire mode 27
Figure 12. LGA-14 2x2x1 mechanical drawing 45

1 Block diagram and pin description

1.1 Block diagram

Figure 1. Block diagram

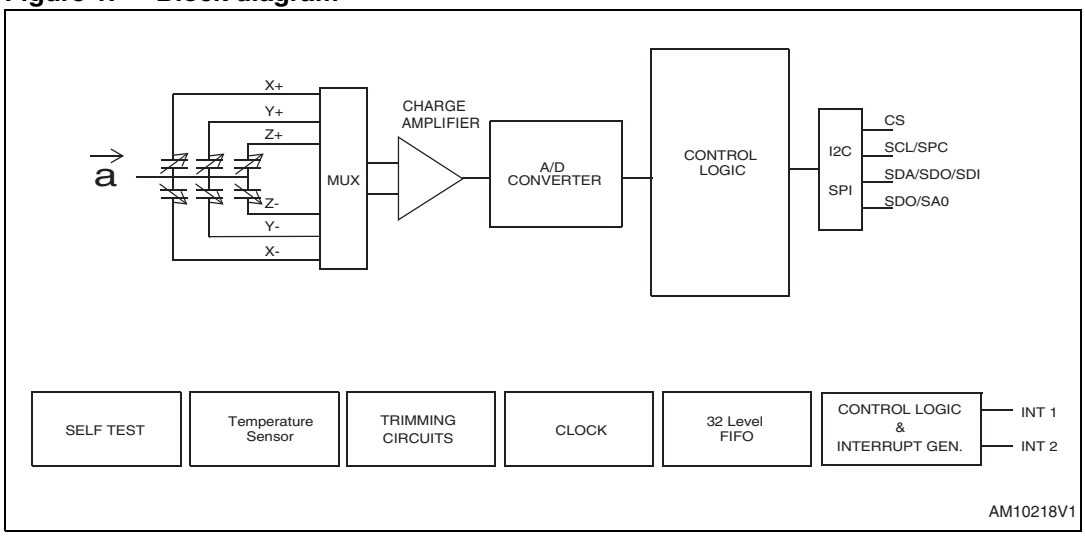

1.2 Pin description

Figure 2. Pin connection

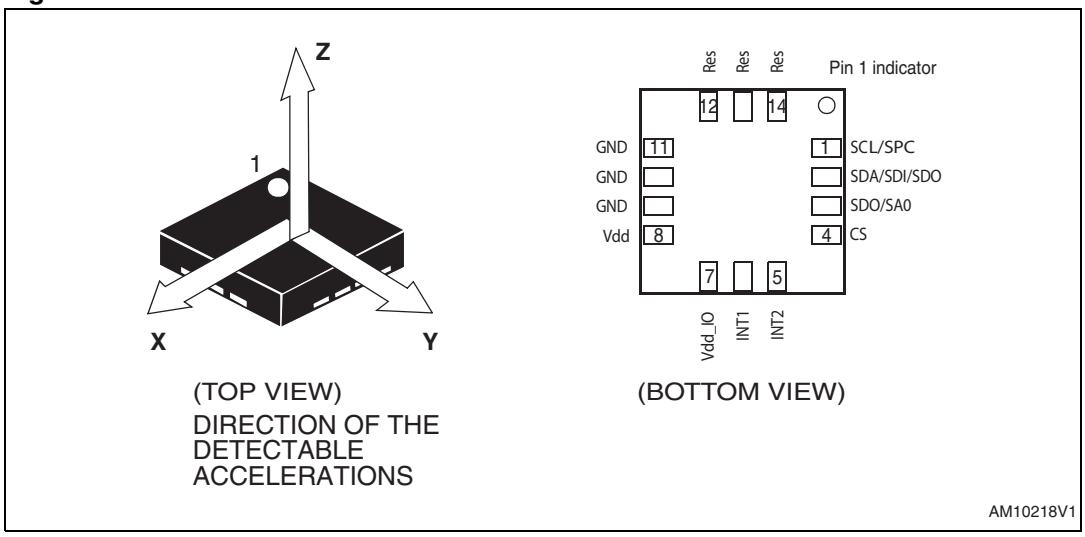

Table 2. Pin description

Pin#	Name	Function
1	SCL SPC	I^2C serial clock (SCL) SPI serial port clock (SPC)
2	SDA SDI SDO	I^2C serial data (SDA) SPI serial data input (SDI) 3-wire interface serial data output (SDO)
3	SDO SA0	SPI serial data output (SDO) I^2C less significant bit of the device address (SA0)
4	CS	SPI enable I^2C/SPI mode selection (1: SPI idle mode / I^2C communication enabled; 0: SPI communication mode / I^2C disabled)
5	INT2	Interrupt pin 2
6	INT1	Interrupt pin 1
7	Vdd_IO	Power supply for I/O pins
8	Vdd	Power supply
9	GND	0 V supply
10	Res	Connect to GND
11	Res	Connect to GND
12-14	Res	Connect to GND

2 Mechanical and electrical specifications

2.1 Mechanical characteristics

@ Vdd = 2.5 V, T = 25 °C unless otherwise noted[a].

Table 3. Mechanical characteristics

Symbol	Parameter	Test conditions	Min.	Typ.[1]	Max.	Unit
FS	Measurement range[2]	FS bit set to 00		±2.0		g
		FS bit set to 01		±4.0		
		FS bit set to 10		±8.0		
		FS bit set to 11		±16.0		
So	Sensitivity	FS bit set to 00; Low power mode		16		mg/digit
		FS bit set to 01; Low power mode		32		
		FS bit set to 10; Low power mode		64		
		FS bit set to 11; Low power mode		192		
TCSo	Sensitivity change vs. temperature	FS bit set to 00		0.01		%/°C
TyOff	Typical zero-*g* level offset accuracy[3],[4]	FS bit set to 00		±100		m*g*
TCOff	Zero-*g* level change vs. temperature	Max. delta from 25 °C		±1		m*g*/°C
Vst	Self-test output change[5],[6],[7]	FS bit set to 00 X axis;	6		90	LSb
		FS bit set to 00 Y axis;	6		90	LSb
		FS bit set to 00 Z axis;	6		90	LSb
Top	Operating temperature range		-40		+85	°C

1. Typical specifications are not guaranteed.
2. Verified by wafer level test and measurement of initial offset and sensitivity.
3. Typical zero-*g* level offset value after MSL3 preconditioning.
4. Offset can be eliminated by enabling the built-in high pass filter.
5. The sign of “Self-test output change” is defined by CTRL_REG4 ST bit, for all axes.
6. “Self-test output change” is defined as the absolute value of: $OUTPUT[LSb]_{(Self\ test\ enabled)} - OUTPUT[LSb]_{(Self\ test\ disabled)}$. 1LSb=16mg at 8-bit representation, ±2 *g* full-scale.
7. After enabling self-test, the correct data is obtained after two samples.

a. The product is factory calibrated at 2.5 V. The operational power supply range is from 1.71V to 3.6 V.

2.2 Temperature sensor characteristics

@ Vdd =2.5 V, T=25 °C unless otherwise noted[b].

Table 4. Temperature sensor characteristics

Symbol	Parameter	Test condition	Min.	Typ.[1]	Max.	Unit
TSDr	Temperature sensor output change vs. temperature			1		digit/°C[2]
TODR	Temperature refresh rate			ODR[3]		Hz
Top	Operating temperature range		-40		+85	°C

1. Typical specifications are not guaranteed.
2. 8-bit resolution.
3. Refer to *Table 27*.

2.3 Electrical characteristics

@ Vdd =2.5 V, T=25 °C unless otherwise noted[c].

Table 5. Electrical characteristics

Symbol	Parameter	Test conditions	Min.	Typ.[1]	Max.	Unit
Vdd	Supply voltage		1.71	2.5	3.6	V
Vdd_IO	I/O pins supply voltage[2]		1.71		Vdd+0.1	V
Idd	Current consumption in Normal mode	50 Hz ODR		6		µA
IddPdn	Current consumption in power down mode			0.5		µA
VIH	Digital high level input voltage		0.8*Vdd_IO			V
VIL	Digital low level input voltage				0.2*Vdd_IO	V
VOH	High level output voltage		0.9*Vdd_IO			V
VOL	Low level output voltage				0.1*Vdd_IO	V
Top	Operating temperature range		-40		+85	°C

1. Typical specification are not guaranteed.
2. It is possible to remove Vdd maintaining Vdd_IO without blocking the communication busses, in this condition the measurement chain is powered off.

b. The product is factory calibrated at 2.5 V. Temperature sensor operation is guaranteed in the range 2 V - 3.6 V.

c. The product is factory calibrated at 2.5 V. The operational power supply range is from 1.71 V to 3.6 V.

2.4 Communication interface characteristics

2.4.1 SPI - serial peripheral interface

Subject to general operating conditions for Vdd and Top.

Table 6. SPI slave timing values

Symbol	Parameter	Value (1)		Unit
		Min.	Max.	
tc(SPC)	SPI clock cycle	100		ns
fc(SPC)	SPI clock frequency		10	MHz
tsu(CS)	CS setup time	5		ns
th(CS)	CS hold time	10		
tsu(SI)	SDI input setup time	5		
th(SI)	SDI input hold time	15		
tv(SO)	SDO valid output time		50	
th(SO)	SDO output hold time	5		
tdis(SO)	SDO output disable time		50	

1. Values are guaranteed at 10 MHz clock frequency for SPI with both 4 and 3 wires, based on characterization results, not tested in production.

Figure 3. SPI slave timing diagram(d)

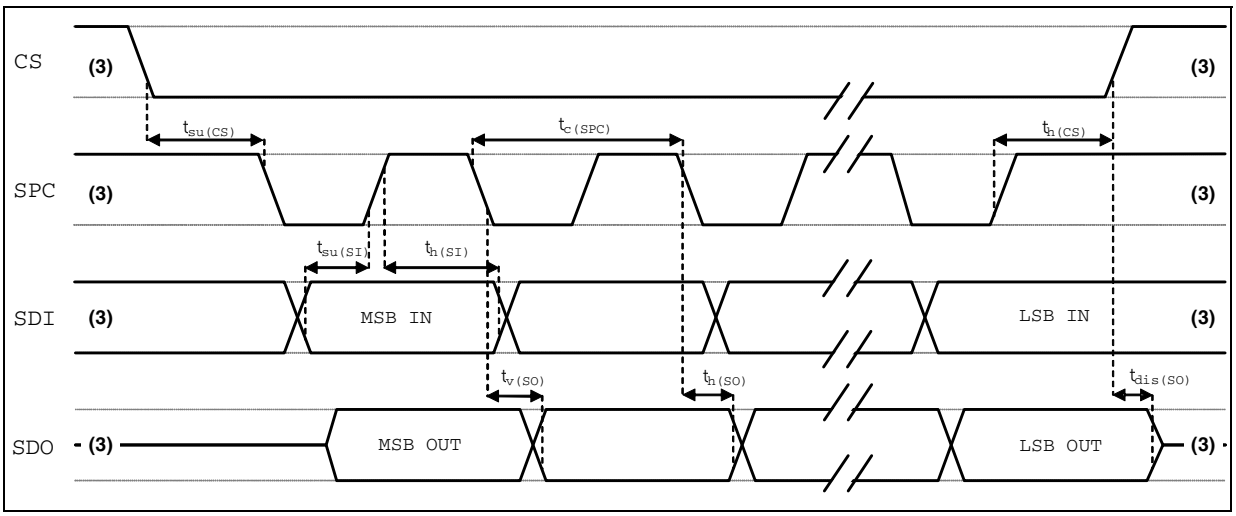

3.When no communication is ongoing, data on SDO is driven by internal pull-up resistors.

d. Measurement points are done at 0.2·Vdd_IO and 0.8·Vdd_IO, for both input and output ports.

2.4.2 I²C - Inter IC control interface

Subject to general operating conditions for Vdd and top.

Table 7. I²C slave timing values

Symbol	Parameter	I²C standard mode (1)		I²C fast mode (1)		Unit
		Min.	Max.	Min.	Max.	
$f_{(SCL)}$	SCL clock frequency	0	100	0	400	kHz
$t_{w(SCLL)}$	SCL clock low time	4.7		1.3		µs
$t_{w(SCLH)}$	SCL clock high time	4.0		0.6		µs
$t_{su(SDA)}$	SDA setup time	250		100		ns
$t_{h(SDA)}$	SDA data hold time	0	3.45	0.01	0.9	µs
$t_{r(SDA)}$ $t_{r(SCL)}$	SDA and SCL rise time		1000	$20 + 0.1C_b$ (2)	300	ns
$t_{f(SDA)}$ $t_{f(SCL)}$	SDA and SCL fall time		300	$20 + 0.1C_b$ (2)	300	ns
$t_{h(ST)}$	START condition hold time	4		0.6		µs
$t_{su(SR)}$	Repeated START condition setup time	4.7		0.6		µs
$t_{su(SP)}$	STOP condition setup time	4		0.6		µs
$t_{w(SP:SR)}$	Bus free time between STOP and START condition	4.7		1.3		µs

1. Data based on standard I²C protocol requirement, not tested in production.
2. Cb = total capacitance of one bus line, in pF.

Figure 4. I²C Slave timing diagram (e)

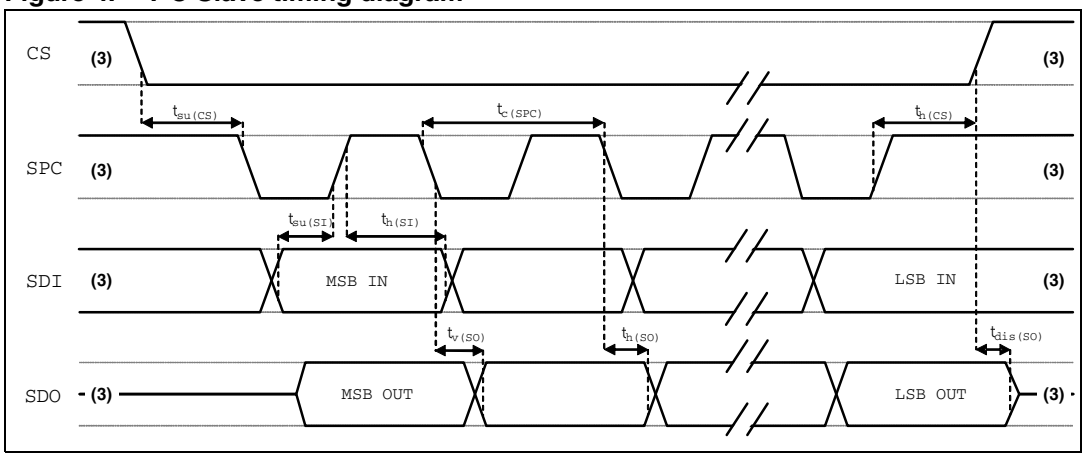

e. Measurement points are done at 0.2·Vdd_IO and 0.8·Vdd_IO, for both ports.

2.5 Absolute maximum ratings

Stresses above those listed as “absolute maximum ratings” may cause permanent damage to the device. This is a stress rating only and functional operation of the device under these conditions is not implied. Exposure to maximum rating conditions for extended periods may affect device reliability.

Table 8. Absolute maximum ratings

Symbol	Ratings	Maximum value	Unit
Vdd	Supply voltage	-0.3 to 4.8	V
Vdd_IO	I/O pins supply voltage	-0.3 to 4.8	V
Vin	Input voltage on any control pin (CS, SCL/SPC, SDA/SDI/SDO, SDO/SA0)	-0.3 to Vdd_IO +0.3	V
A_{POW}	Acceleration (any axis, powered, Vdd = 2.5 V)	3000 *g* for 0.5 ms	
		10000 *g* for 0.1 ms	
A_{UNP}	Acceleration (any axis, unpowered)	3000 *g* for 0.5 ms	
		10000 *g* for 0.1 ms	
T_{OP}	Operating temperature range	-40 to +85	°C
T_{STG}	Storage temperature range	-40 to +125	°C
ESD	Electrostatic discharge protection	2 (HBM)	kV

Note: Supply voltage on any pin should never exceed 4.8 V

This is a mechanical shock sensitive device, improper handling can cause permanent damage to the part.

This is an ESD sensitive device, improper handling can cause permanent damage to the part.

2.6 Terminology and functionality

Terminology

2.6.1 Sensitivity

Sensitivity describes the gain of the sensor and can be determined e.g. by applying 1 *g* acceleration to it. As the sensor can measure DC accelerations this can be done easily by pointing the axis of interest towards the center of the earth, noting the output value, rotating the sensor by 180 degrees (pointing to the sky) and noting the output value again. By doing so, ±1 *g* acceleration is applied to the sensor. Subtracting the larger output value from the smaller one, and dividing the result by 2, leads to the actual sensitivity of the sensor. This value changes very little over temperature and also time. The sensitivity tolerance describes the range of Sensitivities of a large population of sensors.

2.6.2 Zero-*g* level

Zero-*g* level offset (TyOff) describes the deviation of an actual output signal from the ideal output signal if no acceleration is present. A sensor in steady-state on a horizontal surface measures 0 *g* in the X axis and 0 *g* in the Y axis whereas the Z axis measures 1 *g*. The output is ideally in the middle of the dynamic range of the sensor (content of OUT registers 00h, data expressed as 2's complement number). A deviation from the ideal value in this case is called Zero-*g* offset. Offset is to some extent a result of stress to the MEMS sensor and therefore the offset can slightly change after mounting the sensor onto a printed circuit board or exposing it to extensive mechanical stress. Offset changes little over temperature, see *Table 3: Mechanical characteristics*. The Zero-*g* level tolerance (TyOff) describes the standard deviation of the range of Zero-*g* levels of a population of sensors.

Functionality

2.6.3 Normal mode

The LIS2DM provides a single operating mode called *normal mode.*

Table 9 summarizes operating mode performances.

Table 9. Normal mode features

Operating mode	BW [Hz]	Turn-on time [ms]	So @ ±2g [mg/digit]
Normal mode	ODR/2	1	16

Table 10. Current consumption vs. ODR

Operating mode [Hz]	Normal mode [µA]
1	2
10	3
25	4
50	6
100	10
200	18
400	36
1620	100
5376	185

2.6.4 Self-test

Self-test allows the checking of the sensor functionality without moving it. When the self-test is enabled an actuation force is applied to the sensor, simulating a definite input acceleration. In this case the sensor outputs exhibit a change in their DC levels which are related to the selected full scale through the device sensitivity. When self-test is activated, the device output level is given by the algebraic sum of the signals produced by the acceleration acting on the sensor and by the electrostatic test-force. If the output signals change within the amplitude specified in *Table 3*, then the sensor is working properly and the parameters of the interface chip are within the defined specifications.

2.6.5 6D / 4D orientation detection

The LIS2DM includes 6D / 4D orientation detection. In this configuration the interrupt is generated when the device is stable in a known direction. In 4D configuration the Z axis position detection is disabled.

2.6.6 “Sleep to wake” and “Return to sleep”

The LIS2DM can be programmed to automatically switch to low power mode upon recognition of a determined event.
Once the event condition is over, the device returns to the preset normal or high resolution mode.

To enable this function the desired threshold value must be stored in the Act_THS(3Eh) registers while the duration value is written in the Act_DUR(3Fh) registers.

When the acceleration module becomes lower than the threshold value, the device automatically switches to low power mode (10Hz ODR).
During this condition, ODRx bits and the LPen bit in *CTRL_REG1 (20h)* are not considered.

As soon as the acceleration goes back over the threshold, the systems restore the operating mode and ODRs for the *CTRL_REG1 (20h)* and *CTRL_REG3 (22h)* settings.

2.7 Sensing element

A proprietary process is used to create a surface micro-machined accelerometer. The technology allows the transfer of suspended silicon structures which are attached to the substrate in a few points called anchors and are free to move in the direction of the sensed acceleration. To be compatible with the traditional packaging techniques, a cap is placed on top of the sensing element to avoid blocking the moving parts during the moulding phase of the plastic encapsulation.

When an acceleration is applied to the sensor, the proof mass displaces from its nominal position, causing an imbalance in the capacitive half bridge. This imbalance is measured using charge integration in response to a voltage pulse applied to the capacitor.

At steady-state the nominal value of the capacitors are a few pF and when an acceleration is applied the maximum variation of the capacitive load is in the fF range.

2.8 IC interface

The complete measurement chain is composed of a low-noise capacitive amplifier which converts the capacitive unbalancing of the MEMS sensor into an analog voltage that is finally available to the user through an analog-to-digital converter.

The acceleration data may be accessed through an I^2C/SPI interface, therefore making the device particularly suitable for direct interfacing with a microcontroller.

The LIS2DM features a data-ready signal (RDY) which indicates when a new set of measured acceleration data is available, therefore simplifying data synchronization in the digital system that uses the device.

The LIS2DM may also be configured to generate an inertial Wake-Up and Free-Fall interrupt signal according to a programmed acceleration event along the enabled axes. Both free-fall and wake-up can be available simultaneously on two different pins.

2.9 Factory calibration

The IC interface is factory calibrated for sensitivity (So) and Zero-*g* level (TyOff).

The trimming values are stored inside the device in a non-volatile memory. Anytime the device is turned on, the trimming parameters are downloaded into the registers to be used during the active operation. This allows use of the device without further calibration.

2.10 FIFO

The LIS2DM contains a 10-bit, 32-level FIFO. Buffered output allows 4 operation modes: FIFO, stream, trigger and FIFO bypass. Where FIFO bypass mode is activated, FIFO is not operating and remains empty. In FIFO mode, data from acceleration detection on X, Y, and Z-axes measurements are stored in FIFO.

2.11 Temperature sensor

The LIS2DM is supplied with an internal temperature sensor. Temperature data can be enabled by setting the TEMP_EN bit of the TEMP_CFG_REG register to 1.

To retrieve the temperature sensor data, the TDB temperature dummy bit on *CTRL_REG4 (23h)* must be set to ‘1’.

Both OUT_TEMP_H and OUT_TEMP_L registers must be read.

Temperature data is stored in OUT_TEMP_H as 2’s complement data in 8-bit format left justified.

3 Application hints

Figure 5. LIS2DM electrical connection

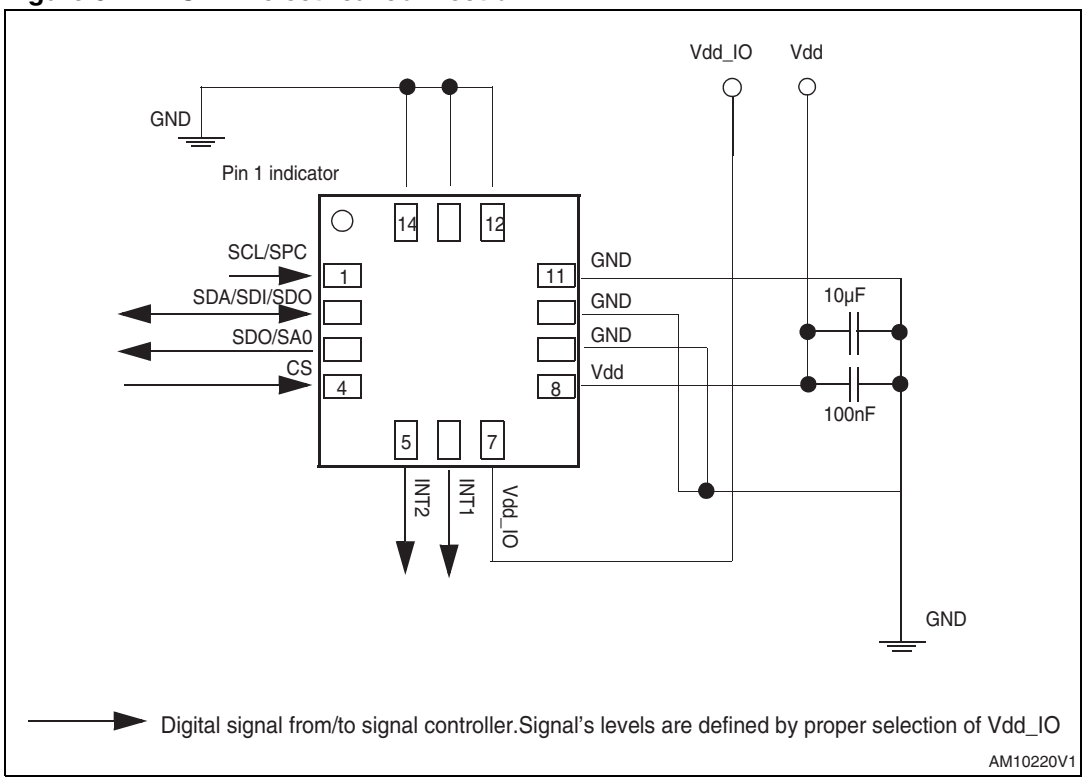

The device core is supplied through the Vdd line while the I/O pads are supplied through the Vdd_IO line. Power supply decoupling capacitors (100 nF ceramic, 10 µF aluminum) should be placed as near as possible to pin 8 of the device (common design practice).

All the voltage and ground supplies must be present at the same time to obtain proper behavior of the IC (refer to *Figure 5*). It is possible to remove Vdd maintaining Vdd_IO without blocking the communication bus, in this condition the measurement chain is powered off.

The functionality of the device and the measured acceleration data is selectable and accessible through the I^2C or SPI interfaces. When using the I^2C, CS must be tied high.

The functions, the threshold, and the timing of the two interrupt pins (INT1 and INT2) can be completely programmed by the user through the I^2C/SPI interface.

3.1 Soldering information

The LGA package is compliant with the ECOPACK®, RoHS, and "Green" standard.
It is qualified for soldering heat resistance according to JEDEC J-STD-020.

Leave "Pin 1 Indicator" unconnected during soldering.

Land pattern and soldering recommendations are available at www.st.com.

4 Digital main blocks

4.1 FIFO

The LIS2DM embeds a 32-slot data FIFO for each of the three output channels, X, Y and Z. This allows a consistent power saving for the system, since the host processor does not need to continuously poll data from the sensor, but it can wake up only when needed and burst the significant data out from the FIFO. This buffer can work accordingly to four different modes: bypass mode, FIFO mode, Stream mode and Stream-to-FIFO mode. Each mode is selected by the FIFO_MODE bits in FIFO_CTRL_REG (2E). Programmable Watermark level, FIFO_empty or FIFO_Full events can be enabled to generate dedicated interrupts on the INT1/2 pin (configuration through FIFO_CFG_REG).

4.1.1 Bypass mode

In bypass mode, the FIFO is not operational and for this reason it remains empty. As described in the next figure, for each channel only the first address is used. The remaining FIFO slots are empty.

4.1.2 FIFO mode

In FIFO mode, data from X, Y and Z channels are stored in the FIFO. A Watermark interrupt can be enabled (FIFO_WTMK_EN bit in FIFO_CTRL_REG (2E) in order to be raised when the FIFO is filled to the level specified in the FIFO_WTMK_LEVEL bits of FIFO_CTRL_REG (2E). The FIFO continues filling until it is full (32 slots of data for X, Y and Z). When full, the FIFO stops collecting data from the input channels.

4.1.3 Stream mode

In Stream mode, data from X, Y and Z measurements are stored in the FIFO. A Watermark interrupt can be enabled and set as in FIFO mode.The FIFO continues filling until it's full (32 slots of data for X, Y and Z). When full, the FIFO discards the older data as the new arrive.

4.1.4 Stream-to-FIFO mode

In Stream-to_FIFO mode, data from X, Y and Z measurements are stored in the FIFO. A Watermark interrupt can be enabled (FIFO_WTMK_EN bit into FIFO_CTRL_REG) in order to be raised when the FIFO is filled to the level specified in the FIFO_WTMK_LEVEL bits of FIFO_CTRL_REG. The FIFO continues filling until it's full (32 slots of 10-bit for X, Y and Z). When full, the FIFO discards the older data as the new arrive. Once a trigger event occurs, the FIFO starts operating in FIFO mode.

4.1.5 Retrieve data from FIFO

FIFO data is read through OUT_X (Addr reg 29h), OUT_Y (Addr reg 2Bh), and OUT_Z (Addr reg 2Dh). When the FIFO is in Stream, Trigger or FIFO mode, a read operation to the OUT_X, OUT_Y or OUT_Z registers provides the data stored in the FIFO. Each time data is read from the FIFO, the oldest X, Y and Z data are placed in the OUT_X, OUT_Y and OUT_Z registers and both single read and read_burst operations can be used. The reading address is automatically updated by the device and it rolls back to 0x28 when register 0x2D is reached. In order to read all FIFO levels in a multiple byte reading,192 bytes (6 output registers by 32 levels) must be read.

5 Digital interfaces

The registers embedded in the LIS2DM may be accessed through both the I^2C and SPI serial interfaces. The latter may be SW configured to operate either in 3-wire or 4-wire interface mode.

The serial interfaces are mapped onto the same pads. To select/exploit the I^2C interface, the CS line must be tied high (i.e. connected to Vdd_IO).

Table 11. Serial interface pin description

Pin name	Pin description
CS	SPI enable I^2C/SPI mode selection (1: SPI idle mode / I^2C communication enabled; 0: SPI communication mode / I^2C disabled)
SCL SPC	I^2C serial clock (SCL) SPI serial port clock (SPC)
SDA SDI SDO	I^2C serial data (SDA) SPI serial data input (SDI) 3-wire interface serial data output (SDO)
SA0 SDO	I^2C less significant bit of the device address (SA0) SPI serial data output (SDO)

5.1 I^2C serial interface

The LIS2DM I^2C is a bus slave. The I^2C is employed to write data into registers whose content can also be read back.

The relevant I^2C terminology is given in *Table 12* below.

Table 12. Serial interface pin description

Term	Description
Transmitter	The device which sends data to the bus
Receiver	The device which receives data from the bus
Master	The device which initiates a transfer, generates clock signals and terminates a transfer
Slave	The device addressed by the master

There are two signals associated with the I^2C bus: the serial clock line (SCL) and the serial data line (SDA). The latter is a bi-directional line used for sending and receiving the data to/from the interface. Both lines must be connected to Vdd_IO through an external pull-up resistor. When the bus is free, both lines are high.

The I^2C interface is compliant with fast mode (400 kHz) I^2C standards as well as with Normal mode.

5.1.1 I²C operation

The transaction on the bus is started through a START (ST) signal. A START condition is defined as a HIGH to LOW transition on the data line while the SCL line is held HIGH. After this has been transmitted by the master, the bus is considered busy. The next byte of data transmitted after the start condition contains the address of the slave in the first 7 bits and the eighth bit tells whether the master is receiving data from the slave or transmitting data to the slave. When an address is sent, each device in the system compares the first seven bits after a start condition with its address. If they match, the device considers itself addressed by the master.

The slave address (SAD) associated to the LIS2DM is 001100xb. The SDO/SA0 pad can be used to modify the less significant bit of the device address. If the SA0 pad is connected to the voltage supply, LSb is ‘1’ (address 0011001b) or else, if the SA0 pad is connected to ground, the LSb value is ‘0’ (address 0011000b). This solution permits the connecting and addressing of two different accelerometers to the same I²C lines.

Data transfer with acknowledge is mandatory. The transmitter must release the SDA line during the acknowledge pulse. The receiver must then pull the data line LOW so that it remains stable low during the HIGH period of the acknowledge clock pulse. A receiver which has been addressed is obliged to generate an acknowledge after each byte of data received.

The I²C embedded in the LIS2DM behaves like a slave device and the following protocol must be adhered to. After the start condition (ST) a slave address is sent, once a slave acknowledge (SAK) has been returned, an 8-bit sub-address (SUB) is transmitted: the 7 LSb represent the actual register address while the MSb enables address auto increment. If the MSb of the SUB field is ‘1’, the SUB (register address) is automatically increased to allow multiple data read/write.

The slave address is completed with a Read/Write bit. If the bit is ‘1’ (Read), a repeated START (SR) condition must be issued after the two sub-address bytes; if the bit is ‘0’ (Write), the master transmits to the slave with direction unchanged. *Table 13* explains how the SAD+read/write bit pattern is composed, listing all the possible configurations.

Table 13. SAD+read/write patterns

Command	SAD[6:1]	SAD[0] = SA0	R/W	SAD+R/W
Read	001100	0	1	00110001 (31h)
Write	001100	0	0	00110000 (30h)
Read	001100	1	1	00110011 (33h)
Write	001100	1	0	00110010 (32h)

Table 14. Transfer when master is writing one byte to slave

Master	ST	SAD + W		SUB		DATA		SP
Slave			SAK		SAK		SAK	

Table 15. Transfer when master is writing multiple bytes to slave:

Master	ST	SAD + W		SUB		DATA		DATA		SP
Slave			SAK		SAK		SAK		SAK	

Table 16. Transfer when master is receiving (reading) one byte of data from slave:

Master	ST	SAD + W		SUB		SR	SAD + R			NMAK	SP
Slave			SAK		SAK			SAK	DATA		

Table 17. Transfer when master is receiving (reading) multiple bytes of data from slave

Master	ST	SAD+W		SUB		SR	SAD+R			MAK		MAK		NMAK	SP
Slave			SAK		SAK			SAK	DATA		DATA		DATA		

Data are transmitted in byte format (DATA). Each data transfer contains 8 bits. The number of bytes transferred per transfer is unlimited. Data is transferred with the most significant bit (MSb) first. If a receiver can't receive another complete byte of data until it has performed some other function, it can hold the clock line SCL LOW to force the transmitter into a wait state. Data transfer only continues when the receiver is ready for another byte and releases the data line. If a slave receiver doesn't acknowledge the slave address (i.e. it is not able to receive because it is performing some real time function) the data line must be left HIGH by the slave. The master can then abort the transfer. A LOW to HIGH transition on the SDA line while the SCL line is HIGH is defined as a STOP condition. Each data transfer must be terminated by the generation of a STOP (SP) condition.

In order to read multiple bytes, it is necessary to assert the most significant bit of the sub-address field. In other words, SUB(7) must be equal to 1 while SUB(6-0) represents the address of first register to be read.

In the presented communication format MAK is Master Acknowledge and NMAK is No Master Acknowledge.

5.2 SPI bus interface

The LIS2DM SPI is a bus slave. The SPI allows the writing and reading of the device registers.

The Serial Interface interacts with the outside world with 4 wires: **CS**, **SPC**, **SDI** and **SDO**.

Figure 6. Read and write protocol

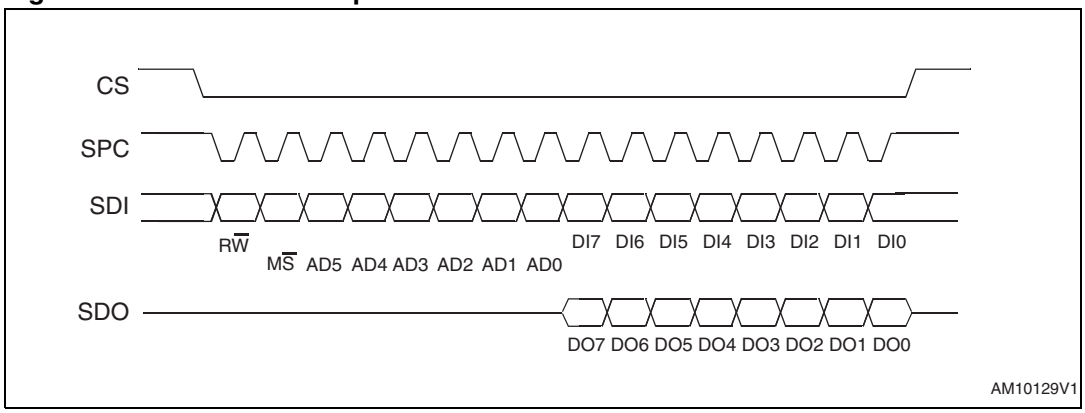

CS is the serial port enable and it is controlled by the SPI master. It goes low at the start of the transmission and returns high at the end. **SPC** is the serial port clock and it is controlled by the SPI master. It is stopped high when **CS** is high (no transmission). **SDI** and **SDO** are respectively the serial port data input and output. Those lines are driven at the falling edge of **SPC** and should be captured at the rising edge of **SPC**.

Both the read register and write register commands are completed in 16 clock pulses or in multiple of 8 in the case of multiple bytes read/write. Bit duration is the time between two falling edges of **SPC**. The first bit (bit 0) starts at the first falling edge of **SPC** after the falling edge of **CS** while the last bit (bit 15, bit 23, ...) starts at the last falling edge of **SPC** just before the rising edge of **CS**.

bit 0: R$\overline{W}$ bit. When 0, the data DI(7:0) is written into the device. When 1, the data DO(7:0) from the device is read. In the latter case, the chip drives **SDO** at the start of bit 8.

bit 1: M$\overline{S}$ bit. When 0, the address remains unchanged in multiple read/write commands. When 1, the address is auto incremented in multiple read/write commands.

bit 2-7: address AD(5:0). This is the address field of the indexed register.

bit 8-15: data DI(7:0) (write mode). This is the data that is written into the device (MSb first).

bit 8-15: data DO(7:0) (read mode). This is the data that is read from the device (MSb first).

In multiple read/write commands further blocks of 8 clock periods are added. When the M$\overline{S}$ bit is ‘0’, the address used to read/write data remains the same for every block. When the M$\overline{S}$ bit is ‘1’, the address used to read/write data is increased at every block.

The function and the behavior of **SDI** and **SDO** remain unchanged.

5.2.1 SPI read

Figure 7. SPI read protocol

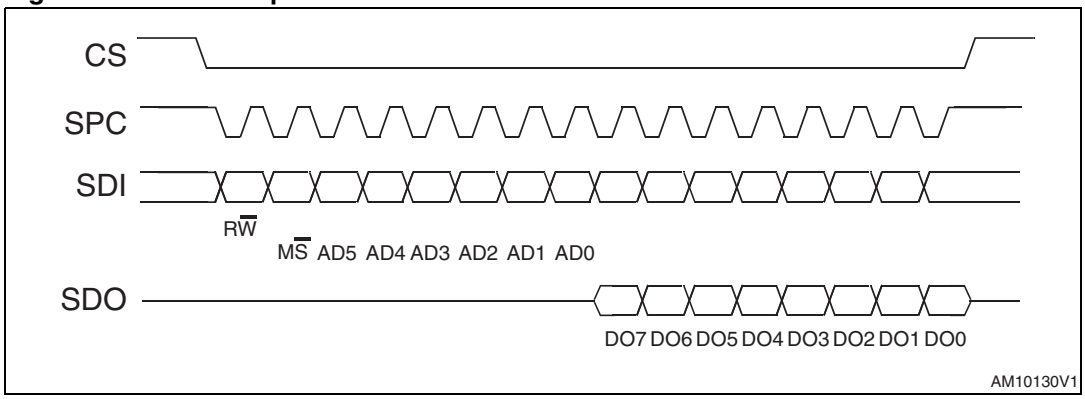

The SPI read command is performed with 16 clock pulses. The multiple byte read command is performed adding blocks of 8 clock pulses at the previous one.

bit 0: READ bit. The value is 1.

bit 1: M$\overline{S}$ bit. When 0, do not increment the address, when 1, increment the address in multiple reading.

bit 2-7: address AD(5:0). This is the address field of the indexed register.

bit 8-15: data DO(7:0) (read mode). This is the data that is read from the device (MSb first).

bit 16-... : data DO(...-8). Further data in multiple byte reading.

Figure 8. Multiple bytes SPI read protocol (2-byte example)

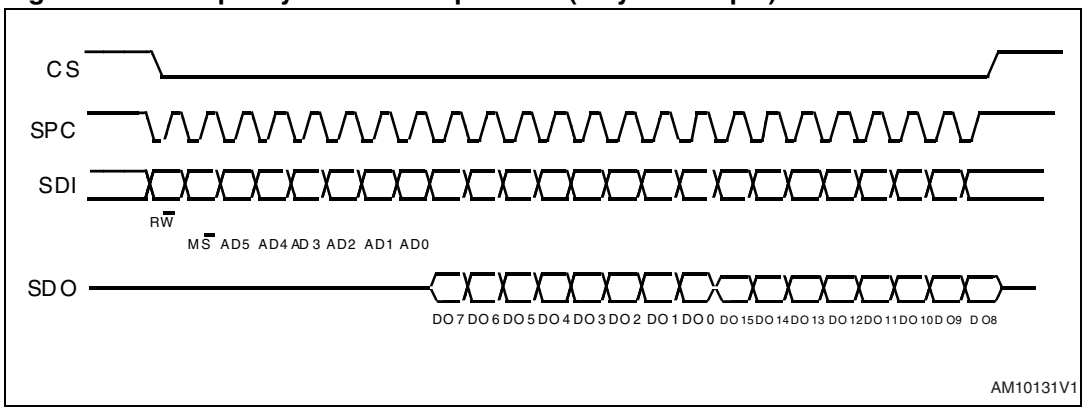

5.2.2 SPI write

Figure 9. SPI write protocol

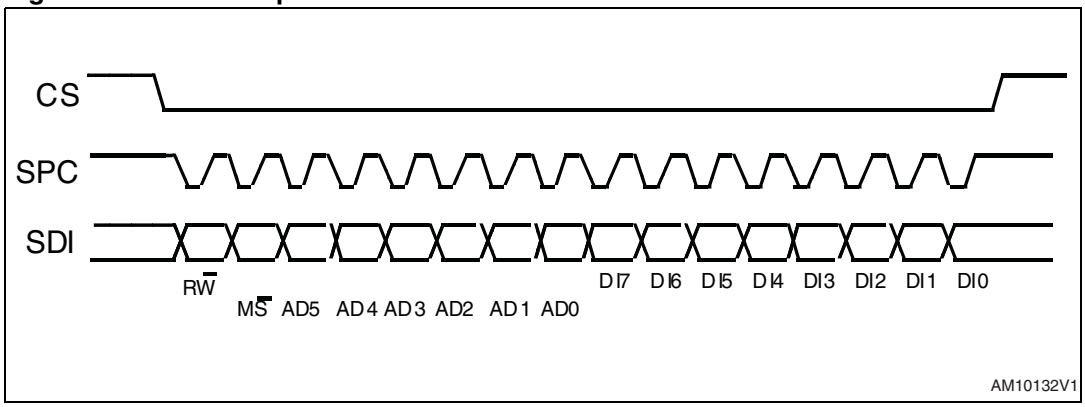

The SPI write command is performed with 16 clock pulses. The multiple byte write command is performed adding blocks of 8 clock pulses to the previous one.

bit 0: WRITE bit. The value is 0.

bit 1: M$\overline{S}$ bit. When 0, do not increment the address, when 1, increment the address in multiple writing.

bit 2 -7: address AD(5:0). This is the address field of the indexed register.

bit 8-15: data DI(7:0) (write mode). This is the data that is written into the device (MSb first).

bit 16-... : data DI(...-8). Further data in multiple byte writing.

Figure 10. Multiple bytes SPI write protocol (2-byte example)

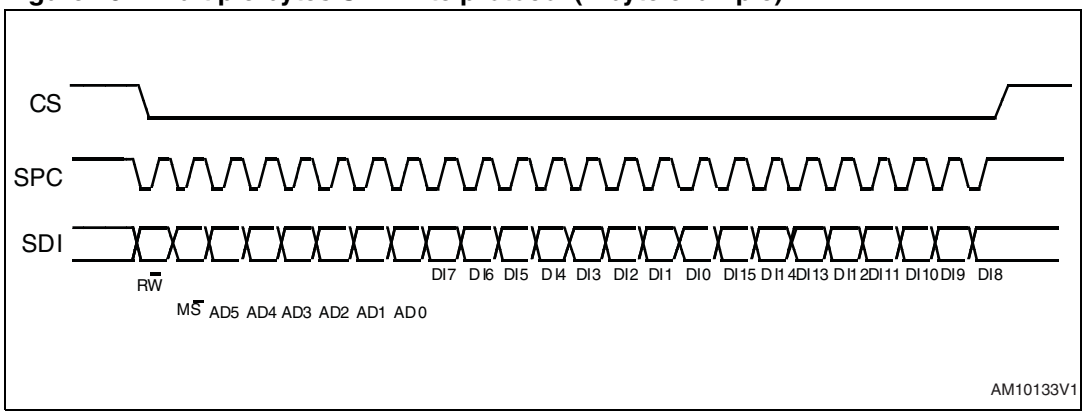

5.2.3 SPI read in 3-wires mode

3-wire mode is entered by setting bit SIM (SPI serial interface mode selection) to ‘1’ in CTRL_REG4.

Figure 11. SPI read protocol in 3-wire mode

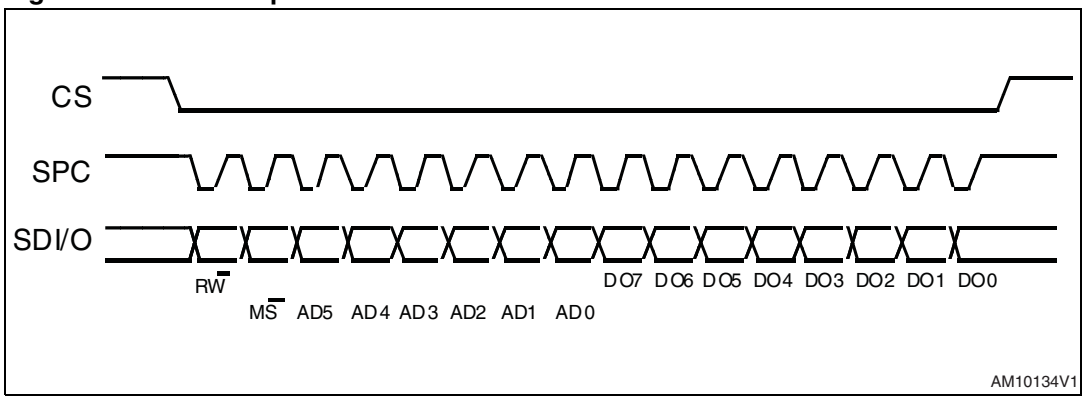

The SPI read command is performed with 16 clock pulses:

bit 0: READ bit. The value is 1.

bit 1: M$\overline{S}$ bit. When 0, do not increment the address, when 1, increment the address in multiple reading.

bit 2-7: address AD(5:0). This is the address field of the indexed register.

bit 8-15: data DO(7:0) (read mode). This is the data that is read from the device (MSb first).

Multiple read command is also available in 3-wire mode.

6 Register mapping

Table 18 below provides a listing of the 8-bit registers embedded in the device and the related addresses:

Table 18. Register address map

Name	Type	Register address		Default	Comment
		Hex	Binary		
Reserved		00 - 06			Reserved
STATUS_REG_AUX	r	07	000 0111		
Reserved	r	08-0B			Reserved
OUT_TEMP_L	r	0C	000 1100	Output	
OUT_TEMP_H	r	0D	000 1101	Output	
INT_COUNTER_REG	r	0E	000 1110		
WHO_AM_I	r	0F	000 1111	00110011	Dummy register
Reserved		10 - 1E			Reserved
TEMP_CFG_REG	rw	1F	001 1111		
CTRL_REG1	rw	20	010 0000	00000111	
CTRL_REG2	rw	21	010 0001	00000000	
CTRL_REG3	rw	22	010 0010	00000000	
CTRL_REG4	rw	23	010 0011	00000000	
CTRL_REG5	rw	24	010 0100	00000000	
CTRL_REG6	rw	25	010 0101	00000000	
REFERENCE	rw	26	010 0110	00000000	
STATUS_REG2	r	27	010 0111	00000000	
FIFO READ START	r	28	010 1000	Output	
OUT_X	r	29	010 1001	Output	
Reserved	r	2A	010 1010	Output	
OUT_Y	r	2B	010 1011	Output	
Reserved	r	2C	010 1100	Output	
OUT_Z	r	2D	010 1101	Output	
FIFO_CTRL_REG	rw	2E	010 1110	00000000	
FIFO_SRC_REG	r	2F	010 1111	00100000	
INT1_CFG	rw	30	011 0000	00000000	
INT1_SOURCE	r	31	011 0001	00000000	
INT1_THS	rw	32	011 0010	00000000	
INT1_DURATION	rw	33	011 0011	00000000	

Table 18. Register address map (continued)

Name	Type	Register address		Default	Comment
		Hex	Binary		
INT2_CFG	rw	34	011 0100	00000000	
INT2_SOURCE	r	35	011 0101	00000000	
INT2_THS	rw	36	011 0110	00000000	
INT2_DURATION	rw	37	011 0111	00000000	
CLICK_CFG	rw	38	011 1000	00000000	
CLICK_SRC	r	39	011 1001	00000000	
CLICK_THS	rw	3A	011 1010	00000000	
TIME_LIMIT	rw	3B	011 1011	00000000	
TIME_LATENCY	rw	3C	011 1100	00000000	
TIME_WINDOW	rw	3D	011 1101	00000000	
Act_THS	rw	3E	011 1110	00000000	
Act_DUR	rw	3F	011 1111	00000000	

Registers marked as *Reserved* or not listed in *Table 18* above must not be changed. The writing to those registers may cause permanent damage to the device.

The content of the registers that are loaded at boot should not be changed. They contain the factory calibration values. Their content is automatically restored when the device is powered-up.

Boot procedure is complete about 5 milliseconds just after powering up the device.

7 Registers Description

7.1 STATUS_AUX (07h)

Table 19. STATUS_REG_AUX register

--	TOR	--	--	--	TDA	--	--

Table 20. STATUS_REG_AUX description

TOR	Temperature Data Overrun. Default value: 0 (0: no overrun has occurred; 1: a new temperature data has overwritten the previous one)
TDA	Temperature new Data Available. Default value: 0 (0: a new temperature data is not yet available; 1: a new temperature data is available)

7.2 OUT_TEMP_L (0Ch), OUT_TEMP_H (0Dh)

Temperature sensor data. Refer to *Section 2.11: Temperature sensor* for details on how to enable and read the temperature sensor output data.

7.3 INT_COUNTER (0Eh)

Table 21. INT_COUNTER register

IC7	IC6	IC5	IC4	IC3	IC2	IC1	IC0

7.4 WHO_AM_I (0Fh)

Table 22. WHO_AM_I register

0	0	1	1	0	0	1	1

Device identification register.

7.5 TEMP_CFG_REG (1Fh)

Table 23. TEMP_CFG_REG register

TEMP_EN1	TEMP_EN0	0	0	0	0	0	0

Table 24. TEMP_CFG_REG description

TEMP_EN[1-0]	Temperature sensor (T) enable. Default value: 00 (00: T disabled; 11: T enabled)

7.6 CTRL_REG1 (20h)

Table 25. CTRL_REG1 register

ODR3	ODR2	ODR1	ODR0	1[(1)]	Zen	Yen	Xen

1. This bit must be set to '1' for the correct device operation.

Table 26. CTRL_REG1 description

ODR3-0	Data rate selection. Default value: 00 (0000: power down mode; Others: refer to *Table 27*)
Zen	Z axis enable. Default value: 1 (0: Z axis disabled; 1: Z axis enabled)
Yen	Y axis enable. Default value: 1 (0: Y axis disabled; 1: Y axis enabled)
Xen	X axis enable. Default value: 1 (0: X axis disabled; 1: X axis enabled)

ODR<3:0> is used to set ODR selection. In *Table 27* all frequencies resulting in a combination of ODR<3:0>

Table 27. Data rate configuration

ODR3	ODR2	ODR1	ODR0	Power mode selection
0	0	0	0	Power down mode
0	0	0	1	Normal mode (1 Hz)
0	0	1	0	Normal mode (10 Hz)
0	0	1	1	Normal mode (25 Hz)
0	1	0	0	Normal mode (50 Hz)
0	1	0	1	Normal mode (100 Hz)
0	1	1	0	Normal mode (200 Hz)
0	1	1	1	Normal mode (400 Hz)
1	0	0	0	Normal mode (1.620 kHz)
1	0	0	1	Normal mode (5.376 kHz)

7.7 CTRL_REG2 (21h)

Table 28. CTRL_REG2 register

HPM1	HPM0	HPCF2	HPCF1	FDS	HPCLICK	HPIS2	HPIS1

Table 29. CTRL_REG2 description

HPM1 -HPM0	High pass filter Mode Selection. Default value: 00 Refer to *Table 30*
HPCF2 - HPCF1	High pass filter Cut Off frequency selection
FDS	Filtered Data Selection. Default value: 0 (0: internal filter bypassed; 1: data from internal filter sent to output register and FIFO)
HPCLICK	High pass filter enabled for CLICK function. (0: filter bypassed; 1: filter enabled)
HPIS2	High pass filter enabled for AOI function on interrupt 2, (0: filter bypassed; 1: filter enabled)
HPIS1	High pass filter enabled for AOI function on interrupt 1, (0: filter bypassed; 1: filter enabled)

Table 30. High pass filter mode configuration

HPM1	HPM0	High Pass filter mode
0	0	Normal mode (reset reading *REFERENCE/DATACAPTURE (26h)* register)
0	1	Reference signal for filtering
1	0	Normal mode
1	1	Autoreset on interrupt event

7.8 CTRL_REG3 (22h)

Table 31. CTRL_REG3 register

I1_CLICK	I1_AOI1	I1_AOI2	I1_DRDY1	I1_DRDY2	I1_WTM	I1_OVERRUN	--

Table 32. CTRL_REG3 description

I1_CLICK	CLICK interrupt on INT1 pin. Default value 0. (0: disable; 1: enable)
I1_AOI1	AOI1 interrupt on INT1 pin. Default value 0. (0: disable; 1: enable)

Table 32. CTRL_REG3 description (continued)

I1_AOI2	AOI2 interrupt on INT1 pin. Default value 0. (0: disable; 1: enable)
I1_DRDY1	DRDY1 interrupt on INT1 pin. Default value 0. (0: disable; 1: enable)
I1_DRDY2	DRDY2 interrupt on INT1 pin. Default value 0. (0: disable; 1: enable)
I1_WTM	FIFO Watermark interrupt on INT1 pin. Default value 0. (0: disable; 1: enable)
I1_OVERRUN	FIFO Overrun interrupt on INT1 pin. Default value 0. (0: disable; 1: enable)

7.9 CTRL_REG4 (23h)

Table 33. CTRL_REG4 register

TDB	0(1)	FS1	FS0	0	ST1	ST0	SIM

1. This bit must be set to “0” for the correct device operation.

Table 34. CTRL_REG4 description

TDB	Refer to *Section 2.11*.
FS1-FS0	Full scale selection. Default value: 00 (00: +/- 2G; 01: +/- 4G; 10: +/- 8G; 11: +/- 16G)
ST1-ST0	Self-Test Enable. Default value: 00 (00: self-test disabled; Other: see *Table 19*)
SIM	SPI serial interface mode selection. Default value: 0 (0: 4-wire interface; 1: 3-wire interface).

Table 35. Self test mode configuration

ST1	ST0	Self test mode
0	0	Normal mode
0	1	Self-test 0
1	0	Self-test 1
1	1	--

7.10 CTRL_REG5 (24h)

Table 36. CTRL_REG5 register

BOOT	FIFO_EN	--	--	LIR_INT1	D4D_INT1	LIR_INT2	D4D_INT2

Table 37. CTRL_REG5 description

BOOT	Reboot memory content. Default value: 0 (0: Normal mode; 1: reboot memory content)
FIFO_EN	FIFO enable. Default value: 0 (0: FIFO disable; 1: FIFO enable)
LIR_INT1	Latch interrupt request on the INT1_SRC register, with the INT1_SRC register cleared by reading INT1_SRC itself. Default value: 0. (0: interrupt request not latched; 1: interrupt request latched)
D4D_INT1	4D enable: 4D detection is enabled on INT1 pin when 6D bit on INT1_CFG is set to 1.
LIR_INT2	Latch interrupt request on the INT2_SRC register, with the INT2_SRC register cleared by reading INT2_SRC itself. Default value: 0. (0: interrupt request not latched; 1: interrupt request latched)
D4D_INT2	4D enable: 4D detection is enabled on INT2 pin when 6D bit on INT2_CFG is set to 1.

7.11 CTRL_REG6 (25h)

Table 38. CTRL_REG6 register

I2_CLICKen	I2_INT1	I2_INT2	BOOT_I2	P2_ACT	- -	H_LACTIVE	-

Table 39. CTRL_REG6 description

I2_CLICKen	Click interrupt on INT2 pin. Default value: 0 (0: disable; 1: enable)
I2_INT1	Interrupt 1 function enabled on INT2 pin. Default value: 0 (0: function disable; 1: function enable)
I2_INT2	Interrupt 2 function enabled on INT2 pin. Default value: 0 (0: function disable; 1: function enable)
BOOT_I2	Boot on INT2 pin enable. Default value: 0 (0: disable; 1:enable)
P2_ACT	Activity interrupt enable on INT2 pin. Default value: 0. (0: disable; 1:enable)
H_LACTIVE	interrupt active. Default value: 0. (0: interrupt active high; 1: interrupt active low)

7.12 REFERENCE/DATACAPTURE (26h)

Table 40. REFERENCE register

Ref7	Ref6	Ref5	Ref4	Ref3	Ref2	Ref1	Ref0

Table 41. REFERENCE register description

Ref 7-Ref0	Reference value for interrupt generation. Default value: 0

7.13 STATUS_REG (27h)

Table 42. STATUS register

ZYXOR	ZOR	YOR	XOR	ZYXDA	ZDA	YDA	XDA

Table 43. STATUS register description

ZYXOR	X, Y and Z axis Data Overrun. Default value: 0 (0: no overrun has occurred; 1: a new set of data has overwritten the previous ones)
ZOR	Z axis Data Overrun. Default value: 0 (0: no overrun has occurred; 1: a new data for the Z-axis has overwritten the previous one)
YOR	Y axis Data Overrun. Default value: 0 (0: no overrun has occurred; 1: a new data for the Y-axis has overwritten the previous one)
XOR	X axis Data Overrun. Default value: 0 (0: no overrun has occurred; 1: a new data for the X-axis has overwritten the previous one)
ZYXDA	X, Y and Z axis New Data Available. Default value: 0 (0: a new set of data is not yet available; 1: a new set of data is available)
ZDA	Z axis New Data Available. Default value: 0 (0: a new data for the Z-axis is not yet available; 1: a new data for the Z-axis is available)
YDA	Y axis New Data Available. Default value: 0 (0: a new data for the Y-axis is not yet available; 1: a new data for the Y-axis is available)

7.14 FIFO_READ_START (28h)

FIFO starts reading the register. Before a new data reading from FIFO, perform a spare data read from FIFO_READ_START (28h).

7.15 OUT_X (29h)

X-axis acceleration data. The value is expressed as 2's complement with 8-bit data.

7.16 OUT_Y (2Bh)

Y-axis acceleration data. The value is expressed as 2's complement with 8-bit data.

7.17 OUT_Z (2Dh)

Z-axis acceleration data. The value is expressed as 2's complement with 8-bit data.

7.18 FIFO_CTRL_REG (2Eh)

Table 44. FIFO_CTRL_REG register

FM1	FM0	TR	FTH4	FTH3	FTH2	FTH1	FTH0

Table 45. FIFO_CTRL_REG register description

FM1-FM0	FIFO mode selection. Default value: 00 (see *Table 46*)
TR	Trigger selection. Default value: 0 0: trigger event allows to trigger signal on INT1 1: trigger event allows to trigger signal on INT2
FTH4:0	Default value: 0

Table 46. FIFO mode configuration

FM1	FM0	FIFO mode
0	0	Bypass mode
0	1	FIFO mode
1	0	Stream mode
1	1	Trigger mode

7.19 FIFO_SRC_REG (2Fh)

Table 47. FIFO_SRC register

WTM	OVRN_FIFO	EMPTY	FSS4	FSS3	FSS2	FSS1	FSS0

7.20 INT1_CFG (30h)

Table 48. INT1_CFG description

AOI	AND/OR combination of interrupt events. Default value: 0. Refer to *Table 49*
6D	6 direction detection function enabled. Default value: 0. Refer to *Table 49*
ZHIE/ ZUPE	Enable interrupt generation on Z high event or on direction recognition. Default value: 0 (0: disable interrupt request;1: enable interrupt request)

Table 48. INT1_CFG description

ZLIE/ ZDOWNE	Enable interrupt generation on Z low event or on direction recognition. Default value: 0 (0: disable interrupt request;1: enable interrupt request)
YHIE/ YUPE	Enable interrupt generation on Y high event or on direction recognition. Default value: 0 (0: disable interrupt request; 1: enable interrupt request.)
YLIE/ YDOWNE	Enable interrupt generation on Y low event or on direction recognition. Default value: 0 (0: disable interrupt request; 1: enable interrupt request.)
XHIE/ XUPE	Enable interrupt generation on X high event or on direction recognition. Default value: 0 (0: disable interrupt request; 1: enable interrupt request.)
XLIE/XDOWN E	Enable interrupt generation on X low event or on direction recognition. Default value: 0 (0: disable interrupt request; 1: enable interrupt request.)

Content of this register is loaded at boot.

Write operation at this address is possible only after system boot.

Table 49. Interrupt mode

AOI	6D	Interrupt mode
0	0	OR combination of interrupt events
0	1	6 direction movement recognition
1	0	AND combination of interrupt events
1	1	6 direction position recognition

Difference between AOI-6D = ‘01’ and AOI-6D = ‘11’.

AOI-6D = ‘01’ is movement recognition. An interrupt is generated when orientation moves from unknown zone to known zone. The interrupt signal stays for a duration ODR.

AOI-6D = ‘11’ is direction recognition. An interrupt is generated when orientation is inside a known zone. The interrupt signal stays until orientation is inside the zone.

7.21 INT1_SRC (31h)

Table 50. INT1_SRC register

0	IA	ZH	ZL	YH	YL	XH	XL

Table 51. INT1_SRC description

IA	Interrupt active. Default value: 0 (0: no interrupt has been generated; 1: one or more interrupts have been generated)
ZH	Z high. Default value: 0 (0: no interrupt, 1: Z high event has occurred)
ZL	Z low. Default value: 0 (0: no interrupt; 1: Z low event has occurred)

Table 51. INT1_SRC description

YH	Y high. Default value: 0 (0: no interrupt, 1: Y high event has occurred)
YL	Y low. Default value: 0 (0: no interrupt, 1: Y low event has occurred)
XH	X high. Default value: 0 (0: no interrupt, 1: X high event has occurred)
XL	X low. Default value: 0 (0: no interrupt, 1: X low event has occurred)

Interrupt 1 source register. Read only register.

Reading at this address clears the INT1_SRC IA bit (and the interrupt signal on the INT 1 pin) and allows the refreshment of data in the INT1_SRC register if the latched option was chosen.

7.22 INT1_THS (32h)

Table 52. INT1_THS register

0	THS6	THS5	THS4	THS3	THS2	THS1	THS0

Table 53. INT1_THS description

THS6 - THS0	Interrupt 1 threshold. Default value: 000 0000 1LSb = 16 mg @FS=2g 1LSb = 32 mg @FS=4g 1LSb = 62 mg @FS=8g 1LSb = 186 mg @FS=16g

7.23 INT1_DURATION (33h)

Table 54. INT1_DURATION register

0	D6	D5	D4	D3	D2	D1	D0

Table 55. INT1_DURATION description

D6 - D0	Duration value. Default value: 000 0000 1 LSb = 1/ODR

D6 - D0 bits set the minimum duration of the interrupt 2 event to be recognized. Duration steps and maximum values depend on the ODR chosen.

Duration time is measured in N/ODR, where N is the content of the duration register.

7.24 INT2_CFG (34h)

Table 56. INT2_CFG register

AOI	6D	ZHIE	ZLIE	YHIE	YLIE	XHIE	XLIE

Table 57. INT2_CFG description

AOI	AND/OR combination of interrupt events. Default value: 0. (See *Table 58* below)
6D	6 direction detection function enabled. Default value: 0. Refer to *Table 58*
ZHIE	Enable interrupt generation on Z high event. Default value: 0 (0: disable interrupt request; 1: enable interrupt request on measured accel. value higher than preset threshold)
ZLIE	Enable interrupt generation on Z low event. Default value: 0 (0: disable interrupt request; 1: enable interrupt request on measured accel. value lower than preset threshold)
YHIE	Enable interrupt generation on Y high event. Default value: 0 (0: disable interrupt request; 1: enable interrupt request on measured accel. value higher than preset threshold)
YLIE	Enable interrupt generation on Y low event. Default value: 0 (0: disable interrupt request; 1: enable interrupt request on measured accel. value lower than preset threshold)
XHIE	Enable interrupt generation on X high event. Default value: 0 (0: disable interrupt request; 1: enable interrupt request on measured accel. value higher than preset threshold)
XLIE	Enable interrupt generation on X low event. Default value: 0 (0: disable interrupt request; 1: enable interrupt request on measured accel. value lower than preset threshold)

The content of this register is loaded at boot.

Write operation at this address is possible only after system boot.

Table 58. Interrupt mode

AOI	6D	Interrupt mode
0	0	OR combination of interrupt events
0	1	6 direction movement recognition
1	0	AND combination of interrupt events
1	1	6 direction position recognition

Difference between AOI-6D = ‘01’ and AOI-6D = ‘11’.

AOI-6D = ‘01’ is movement recognition. An interrupt is generated when orientation moves from an unknown zone to a known zone. The interrupt signal stays for a duration ODR.

AOI-6D = ‘11’ is direction recognition. An interrupt is generated when orientation is inside a known zone. The interrupt signal stays until orientation is inside the zone.

7.25 INT2_SRC (35h)

Table 59. INT2_SRC register

0	IA	ZH	ZL	YH	YL	XH	XL

Table 60. INT2_SRC description

IA	Interrupt active. Default value: 0 (0: no interrupt has been generated; 1: one or more interrupts have been generated)
ZH	Z high. Default value: 0 (0: no interrupt, 1: Z high event has occurred)
ZL	Z low. Default value: 0 (0: no interrupt; 1: Z low event has occurred)
YH	Y high. Default value: 0 (0: no interrupt, 1: Y high event has occurred)
YL	Y low. Default value: 0 (0: no interrupt, 1: Y low event has occurred)
XH	X high. Default value: 0 (0: no interrupt, 1: X high event has occurred)
XL	X Low. Default value: 0 (0: no interrupt, 1: X low event has occurred)

Interrupt 2 source register. Read only register.

Reading at this address clears the INT2_SRC IA bit (and the interrupt signal on the INT 2 pin) and allows the refreshment of data in the INT2_SRC register if the latched option was chosen.

7.26 INT2_THS (36h)

Table 61. INT2_THS register

0	THS6	THS5	THS4	THS3	THS2	THS1	THS0

Table 62. INT2_THS description

THS6 - THS0	Interrupt 2 threshold. Default value: 000 0000 1LSb = 16 mg @FS=2g; 1LSb = 32 mg @FS=4g; 1LSb = 62 mg @FS=8g; 1LSb = 186 mg @FS=16g

7.27 INT2_DURATION (37h)

Table 63. INT2_DURATION register

0	D6	D5	D4	D3	D2	D1	D0

Table 64. INT2_DURATION description

D6-D0	Duration value. Default value: 000 0000 1 LSb = 1/ODR(1)

1. Duration time is measured in N/ODR, where N is the content of the duration register.

D6 - D0 bits set the minimum duration of the interrupt 2 event to be recognized. Duration time steps and maximum values depend on the ODR chosen.

7.28 CLICK_CFG (38h)

Table 65. CLICK_CFG register

--	--	ZD	ZS	YD	YS	XD	XS

Table 66. CLICK_CFG description

ZD	Enable interrupt double tap-tap on Z axis. Default value: 0 (0: disable interrupt request; 1: enable interrupt request on measured accel. value higher than preset threshold)
ZS	Enable interrupt single tap-tap on Z axis. Default value: 0 (0: disable interrupt request; 1: enable interrupt request on measured accel. value higher than preset threshold)
YD	Enable interrupt double tap-tap on Y axis. Default value: 0 (0: disable interrupt request; 1: enable interrupt request on measured accel. value higher than preset threshold)
YS	Enable interrupt single tap-tap on Y axis. Default value: 0 (0: disable interrupt request; 1: enable interrupt request on measured accel. value higher than preset threshold)

Table 66. CLICK_CFG description

XD	Enable interrupt double tap-tap on X axis. Default value: 0 (0: disable interrupt request; 1: enable interrupt request on measured accel. value higher than preset threshold)
XS	Enable interrupt single tap-tap on X axis. Default value: 0 (0: disable interrupt request; 1: enable interrupt request on measured accel. value higher than preset threshold)

7.29 CLICK_SRC (39h)

Table 67. CLICK_SRC register

	IA	DClick	SClick	Sign	Z	Y	X

Table 68. CLICK_SRC description

IA	Interrupt active. Default value: 0 (0: no interrupt has been generated; 1: one or more interrupts have been generated)
DClick	Double click-click enable. Default value: 0 (0:double click-click detection disable, 1: double tap-tap detection enable)
Stap	Single click-click enable. Default value: 0 (0:Single click-click detection disable, 1: single click-click detection enable)
Sign	Click-click sign. 0: positive detection, 1: negative detection
Z	Z click-click detection. Default value: 0 (0: no interrupt, 1: Z high event has occurred)
Y	Y click-click detection. Default value: 0 (0: no interrupt, 1: Y high event has occurred)
X	X click-click detection. Default value: 0 (0: no interrupt, 1: X high event has occurred)

7.30 CLICK_THS (3Ah)

Table 69. CLICK_THS register

-	Ths6	Ths5	Ths4	Ths3	Ths2	Ths1	Ths0

Table 70. CLICK_SRC description

Ths6-Ths0	Click-click threshold. Default value: 000 0000

7.31 TIME_LIMIT (3Bh)

Table 71. TIME_LIMIT register

-	TLI6	TLI5	TLI4	TLI3	TLI2	TLI1	TLI0

Table 72. TIME_LIMIT description

TLI7-TLI0	Click-click time limit. Default value: 000 0000

7.32 TIME_LATENCY (3Ch)

Table 73. TIME_LATENCY register

TLA7	TLA6	TLA5	TLA4	TLA3	TLA2	TLA1	TLA0

Table 74. TIME_LATENCY description

TLA7-TLA0	Click-Click Time Latency. Default value: 000 0000

7.33 TIME WINDOW(3Dh)

Table 75. TIME_WINDOW register

TW7	TW6	TW5	TW4	TW3	TW2	TW1	TW0

Table 76. TIME_WINDOW description

TW7-TW0	Click-Click Time Window

7.34 Act_THS(3Eh)

Table 77. TIME_WINDOW register

--	Acth6	Acth5	Acth4	Acth3	Acth2	Acth1	Acth0

Table 78. TIME_WINDOW description

Acth[6-0]	Sleep to Wake, Return to Sleep activation threshold in low power mode 1LSb = 16 mg @FS=2g 1LSb = 32 mg @FS=4g 1LSb = 62 mg @FS=8g 1LSb = 186 mg @FS=16g

7.35 Act_DUR (3Fh)

Table 79. Act_DUR register

ActD7	ActD6	ActD5	ActD4	ActD3	ActD2	ActD1	ActD0

Table 80. Act_DUR description

ActD[7-0]	Sleep to Wake, Return to Sleep duration 1LSb = (8*1[LSb]+1)/ODR

8 Package information

In order to meet environmental requirements, ST offers these devices in different grades of ECOPACK® packages, depending on their level of environmental compliance. ECOPACK specifications, grade definitions and product status are available at: www.st.com.
ECOPACK is an ST trademark.

Table 81. LGA-14 2x2x1 mechanical dimensions

Ref.	Min.	Typ.	Max.
A1			1
A2		0.785	
A3		0.200	
D1	1.850	2.000	2.150
E1	1.850	2.000	2.150
L1		0.900	
L2		1.250	
N1		0.350	
T1		0.275	
T2		0.200	
P1		0.850	
P2		0.850	
d		0.150	
M		0.100	
K		0.050	

Figure 12. LGA-14 2x2x1 mechanical drawing

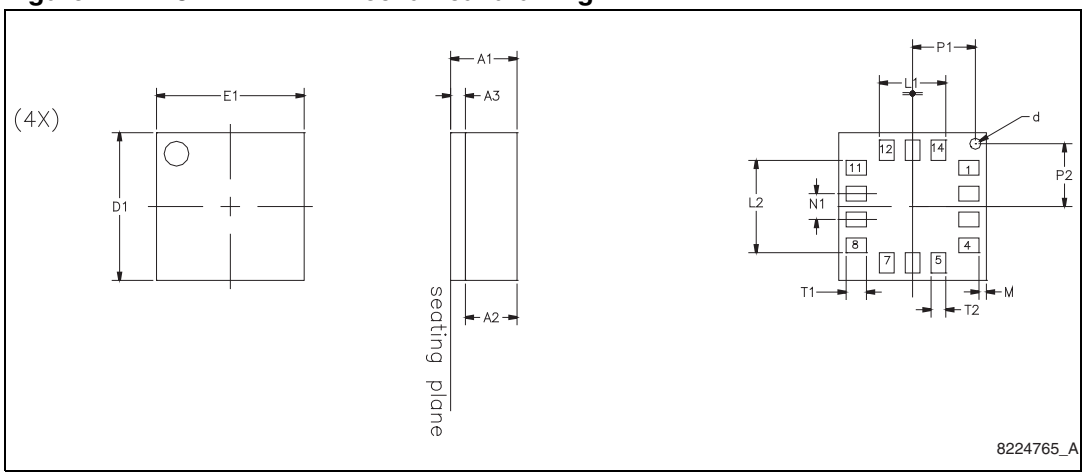

9 Revision history

Table 82. Document revision history

Date	Revision	Changes
25-Nov-2011	1	Initial release.

Please Read Carefully:

Information in this document is provided solely in connection with ST products. STMicroelectronics NV and its subsidiaries (“ST”) reserve the right to make changes, corrections, modifications or improvements, to this document, and the products and services described herein at any time, without notice.

All ST products are sold pursuant to ST’s terms and conditions of sale.

Purchasers are solely responsible for the choice, selection and use of the ST products and services described herein, and ST assumes no liability whatsoever relating to the choice, selection or use of the ST products and services described herein.

No license, express or implied, by estoppel or otherwise, to any intellectual property rights is granted under this document. If any part of this document refers to any third party products or services it shall not be deemed a license grant by ST for the use of such third party products or services, or any intellectual property contained therein or considered as a warranty covering the use in any manner whatsoever of such third party products or services or any intellectual property contained therein.

UNLESS OTHERWISE SET FORTH IN ST’S TERMS AND CONDITIONS OF SALE ST DISCLAIMS ANY EXPRESS OR IMPLIED WARRANTY WITH RESPECT TO THE USE AND/OR SALE OF ST PRODUCTS INCLUDING WITHOUT LIMITATION IMPLIED WARRANTIES OF MERCHANTABILITY, FITNESS FOR A PARTICULAR PURPOSE (AND THEIR EQUIVALENTS UNDER THE LAWS OF ANY JURISDICTION), OR INFRINGEMENT OF ANY PATENT, COPYRIGHT OR OTHER INTELLECTUAL PROPERTY RIGHT.

UNLESS EXPRESSLY APPROVED IN WRITING BY TWO AUTHORIZED ST REPRESENTATIVES, ST PRODUCTS ARE NOT RECOMMENDED, AUTHORIZED OR WARRANTED FOR USE IN MILITARY, AIR CRAFT, SPACE, LIFE SAVING, OR LIFE SUSTAINING APPLICATIONS, NOR IN PRODUCTS OR SYSTEMS WHERE FAILURE OR MALFUNCTION MAY RESULT IN PERSONAL INJURY, DEATH, OR SEVERE PROPERTY OR ENVIRONMENTAL DAMAGE. ST PRODUCTS WHICH ARE NOT SPECIFIED AS "AUTOMOTIVE GRADE" MAY ONLY BE USED IN AUTOMOTIVE APPLICATIONS AT USER’S OWN RISK.

Resale of ST products with provisions different from the statements and/or technical features set forth in this document shall immediately void any warranty granted by ST for the ST product or service described herein and shall not create or extend in any manner whatsoever, any liability of ST.

ST and the ST logo are trademarks or registered trademarks of ST in various countries.

Information in this document supersedes and replaces all information previously supplied.

The ST logo is a registered trademark of STMicroelectronics. All other names are the property of their respective owners.

© 2011 STMicroelectronics - All rights reserved

STMicroelectronics group of companies

Australia - Belgium - Brazil - Canada - China - Czech Republic - Finland - France - Germany - Hong Kong - India - Israel - Italy - Japan - Malaysia - Malta - Morocco - Philippines - Singapore - Spain - Sweden - Switzerland - United Kingdom - United States of America

www.st.com