MATERIAL
- INSULATOR: PBT UL 94V-0 Or PPS
- SHELL: Brass, Nickel/Tin plated Or Tin Plated
- CONTACT: Phosphor Bronze, Gold/Tin plated

ENVIRONMENTAL
- OPERATING TEMPERATURE: -55℃~+105℃

ELECTRICAL
- CONTACT CURRENT RATING: 1 Amp
- DIELECTRIC WITHSTANDING : AC 1000V/min. R.M.S.
- INSULATION RESISTANCE: 500MΩmin. at 500V DC
- CONTACT RESISTANCE: 30mΩ Max

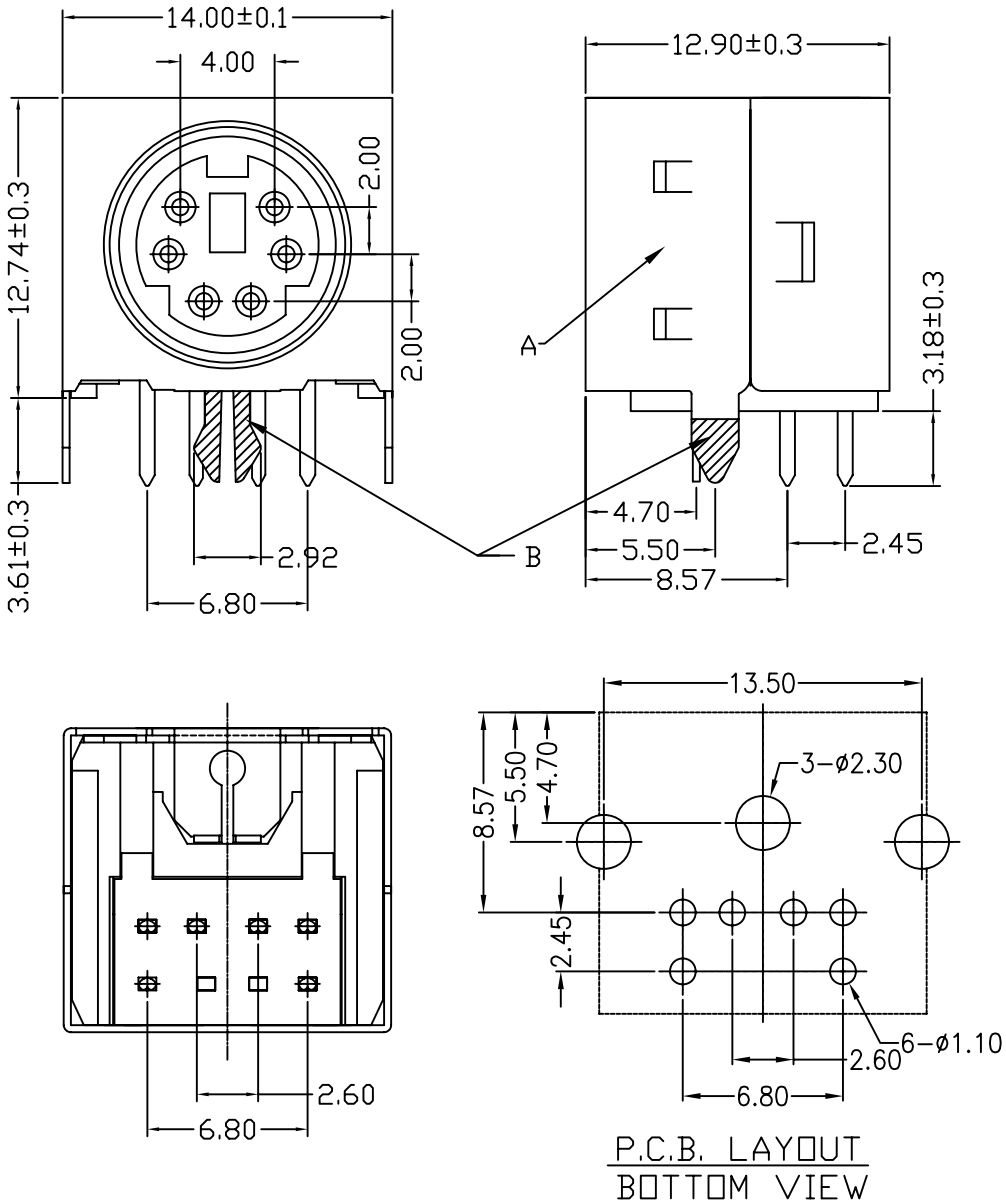

P.C.B. LAYOUT
BOTTOM VIEW

TOLERANCES ARE

.X ± 0.38
.XX ± 0.25
.XXX ±
AWG