未注公差/General tolerances(mm)														
0 ~ 3	>3 ~ 6	>6 ~ 10	>10 ~ 18	>18 ~ 30	>30 ~ 50	>50 ~ 80	>80 ~ 120	>120 ~ 180	>180 ~ 250	>250 ~ 315	>315 ~ 400	>400 ~ 500	>500	0.1/10
±0.12	±0.18	±0.22	±0.26	±0.31	±0.37	±0.57	±0.80	±0.93	±1.05	±1.15	±1.60	±2.20	±2.50	±2°

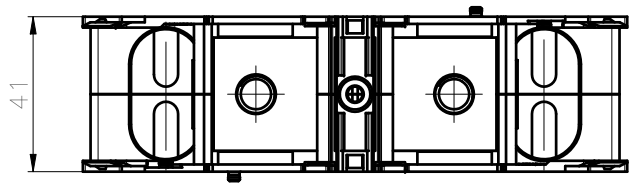

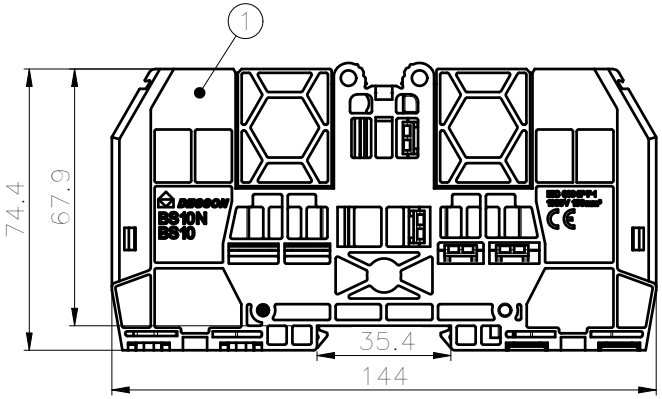

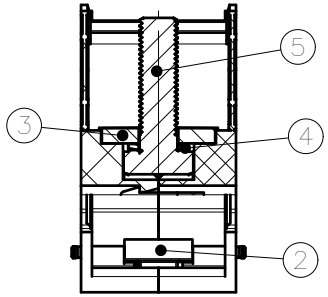

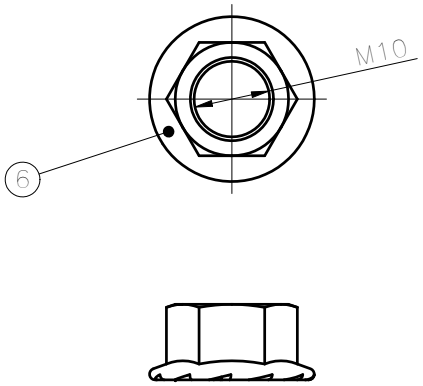

面板安装示意图/Panel installation diagram

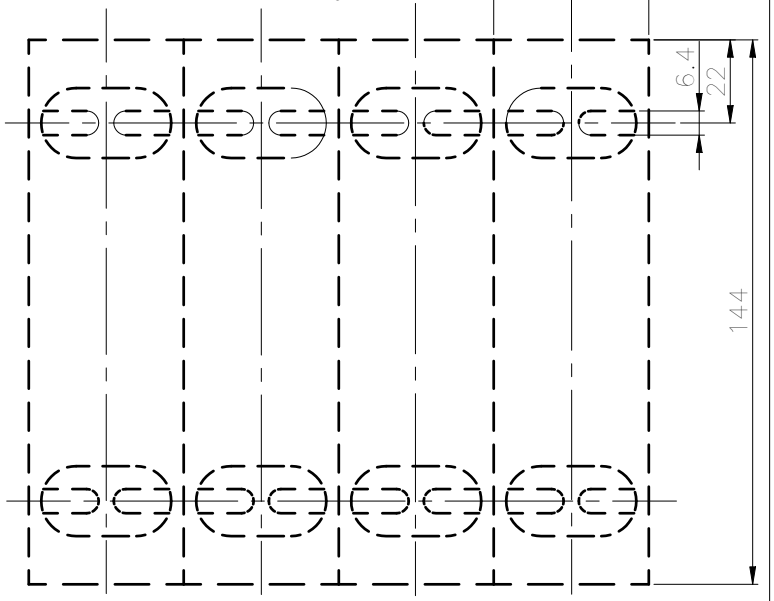

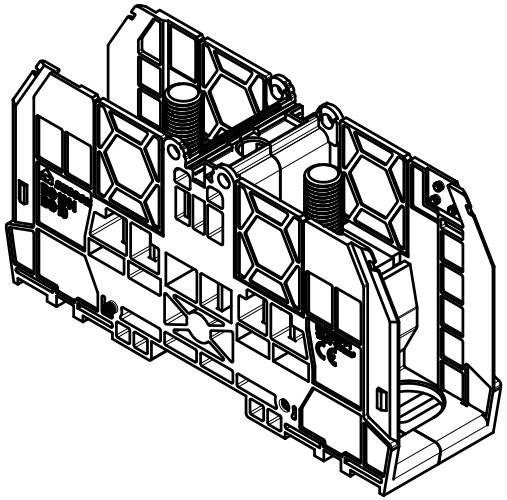

ITEM	NAME OF PART	MATERIAL	NOTES
6	Nut	Steel	M10/Zn Plated
5	Bolt	Steel	M10/Zn Plated
4	Lock Washer	Steel	M10/Zn Plated
3	Current carrier	Copper	Sn Plated
2	Mounting Bar	PA66	UL94V-0
1	Housing	PA66	UL94V-0

UL 标准/UL Standard:	B	C	D
额定电压/电流/Rated Voltage(V)/Current(A)	600/310	/	/
IEC 标准/IEC Standard:			
过压类别/Overvoltage Category/污染等级/Pollution Degree	III/3	III/2	II/2
额定电压/电流/Rated Voltage(V)/Current(A)	1000/309	/	/
额定脉冲电压(KV)/Rate Impulse Voltage(KV)	8	/	/
螺栓扭矩/Torque Tightening(N·m/Lb.in)	M10, 10-20/113-226		
固定螺钉规格/Fixing Screw Specifications	M6		
线径范围(硬线和软线)/Wire Range(rigid and flexible)(AWG/mm²)	10-350 / 6~150		
间距/Pitch(mm)/线数范围/Poles	41/N=01P		
剥线长度/Stripping length(mm)	Depends on Cold pressing		
使用温度范围/Operating temperature(°C)	-40~+105		
符合RoHS环保要求/Conform to RoHS	Yes		

REV	ECN	DESCRIPTION	DRFT	DATE
00		/	Zhao QX	2022-07-18

DEGSON

APPD:	Li GL	2022-07-18
CHKD:	Ma EK	2022-07-18
DRFT:	Zhao QX	2022-07-18

A4 mm (inch)

MATERIAL:

SURFACE/COLOR:

MAT NO./REV: 11070000004-1 /

MAT STATUS: 批量

NAME: BS10 N-GY

DRAWING NO.	TYPE	DRAWING STATUS	SCALE	SHEET
200098746	CUSTOMER DRAWING	已发布	2:1	1/1

Transfer or duplication of this document as well as the utilization or communication of its contents are prohibited unless explicit authorization is granted. Violations will be liable for compensation. All rights reserved for patent, utility model or designs registrations.
除非经明确授权，否则禁止转让、复制、利用、交流本文件的内容，侵犯者将负赔偿责任。本公司保留对涉及发明、实用新型和外观专利的所有权利。