© 2020 TE Connectivity. All Rights Reserved.

STRIP FORM - UNSEALED
Bandware - ungedichtet

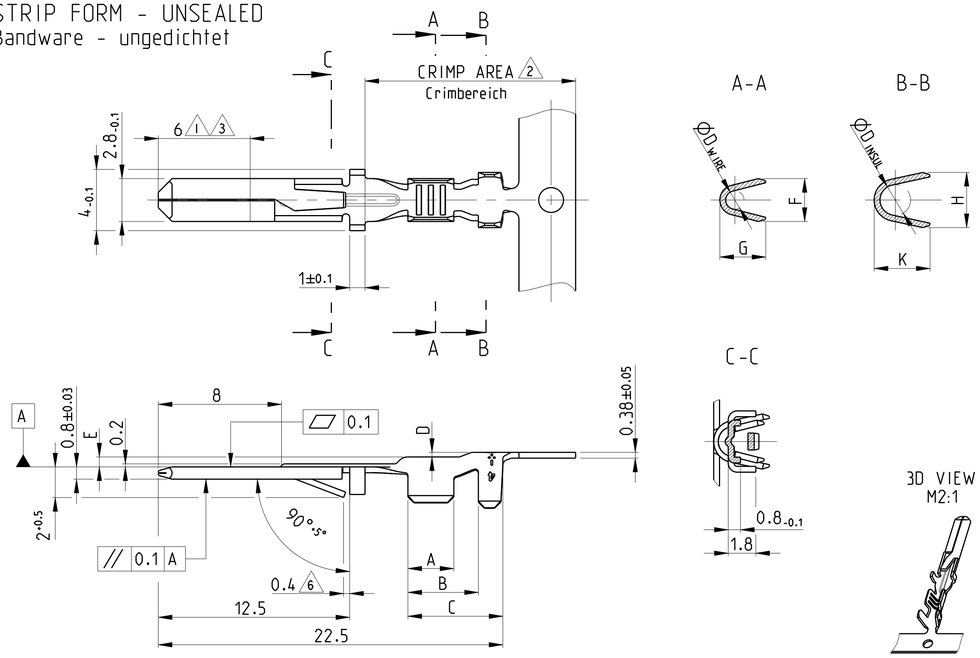

STRIP FORM - SINGLE WIRE SEAL
Bandware - Einzel-Dichtung System

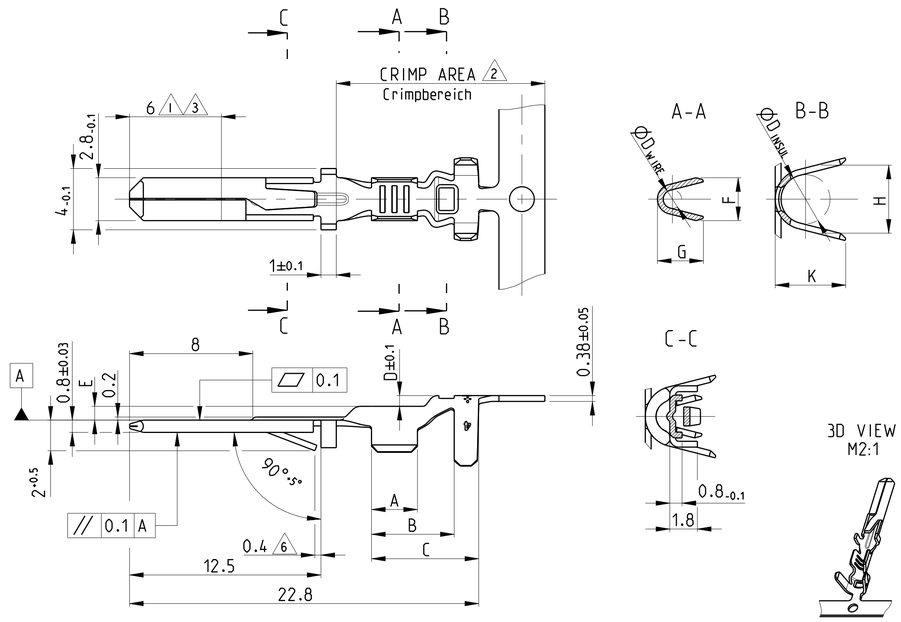

REVISIONS

P	LTR	DESCRIPTION	DATE	DWN	APVD
	A6	REVISED PER ECR-20-008867	08JUL2020	BH	E.W
	A7	REVISED PER ECR-20-013815	22OCT2020	MK	E.W

LOOSE PIECE
Einzelausführung

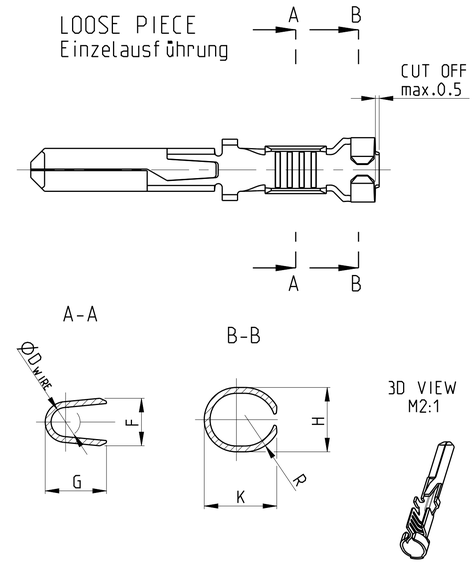

	HAND TOOL Handzage	APPLICATOR Anschlag-WKZ	K	H	R	G	F	D_{WIRE}	K	H	D_{INSUL}	G	F	D_{WIRE}	E	D	C	B	A	7 REELING	INSULATION RANGE Isolations-durchmesser	WIRE RANGE DGB [mm²]	FINISH Oberfläche	MATERIAL	TYCO ORDER No. LOOSE PIECE Einzelausführung	REV	TYCO ORDER No. STRIP FORM Bandware
			INSULATION BARREL Isolationsbereich			WIRE BARREL Drahtbereich			INSULATION BARREL Isolationsbereich			WIRE BARREL Drahtbereich														
			LOOSE PIECE Einzelausführung						STRIP FORM Bandware																	
			CRIMP DIMENSIONS Crimpmaßen																							
SINGLE WIRE SEAL/Einzel-Dichtung	N/A	N/A	4.3	4.8	2.8	4.0	3.1	1.7	4.6	5.6	3.6	4.0	3.8	1.7	0.85	0.95	7.5	5.9	3.5	B	Ø3.4	1.0 - 2.5 FLR	PRETINNED min.1µm	CuSn4	8 ~~0-965975-5~~	J	8 ~~0-929949-5~~
																				B			SEL. GOLD PLATED 1 2	CuZn30	8 ~~0-965975-4~~	J	8 ~~0-929949-4~~
																				A			PLAIN	CuZn30	8 ~~0-965975-3~~	J	8 ~~0-929949-3~~
																				B			PRETINNED min.1µm	CuZn30	8 ~~0-965975-2~~	J	8 ~~0-929949-2~~
																				B			SEL. SILVER PLATED 3	CuZn30	8 ~~0-965975-1~~	J	8 ~~0-929949-1~~
	N/A	N/A	4.3	4.8	2.8	3.0	2.2	1.2	4.6	5.4	3.2	3.0	2.8	1.2	0.9	0.7	7.0	5.4	3.0	B	Ø3.4	0.5 - 1.0 FLR	SEL. GOLD PLATED 1 2	CuZn4	8 ~~0-965974-7~~	A	8 ~~0-929948-7~~
																				A			PLAIN	CuZn4	8 ~~0-965974-6~~	A	8 ~~0-929948-6~~
																				B			PRETINNED min.1µm	CuZn4	8 ~~0-965974-5~~	J	8 ~~0-929948-5~~
																				B			SEL. GOLD PLATED 1 2	CuZn30	8 ~~0-965974-4~~	J	8 ~~0-929948-4~~
																				A			PLAIN	CuZn30	8 ~~0-965974-3~~	J	8 ~~0-929948-3~~
																				B			PRETINNED min.1µm	CuZn30	8 ~~0-965974-2~~	J	8 ~~0-929948-2~~
																				B			SEL. SILVER PLATED 3	CuZn30	8 ~~0-965974-1~~	J	8 ~~0-929948-1~~
UNSEALED / ungedichtet	2-1579001-1 WITH DIE SET: mit Matrize: 1579001-2	N/A	2.5	2.5	1.4	2.2	2.0	0.8	2.8	2.8	1.4	2.2	2.2	0.8	0.65	0.2	5.7	4.1	2.5	B	Ø1.15 - 1.6	0.2 - 0.5 FLR	PRETINNED min.1µm	CuSn4	8 ~~0-963962-5~~	D	8 ~~0-963961-5~~
																				B			SEL. GOLD PLATED 1 2	CuZn30	8 ~~0-963962-4~~	D	8 ~~0-963961-4~~
																				A			PLAIN	CuZn30	8 ~~0-963962-3~~	D	8 ~~0-963961-3~~
																				B			PRETINNED min.1µm	CuZn30	8 ~~0-963962-2~~	D	0-963961-2
																				B			SEL. SILVER PLATED 3	CuZn30	8 ~~0-963962-1~~	D	8 ~~0-963961-1~~
	539635-1 WITH DIE SET: mit Matrize: 539743-2	878416-0	3.7	3.1	(1.8)	3.0	2.2	1.2	4.1	3.9	1.8	3.0	2.8	1.2	0.65	0.2	6.2	4.6	3.0	B	Ø1.4 - 2.3	0.5 - 1.0 FLR	PRETINNED min.1µm	CuSn4	0-928931-5	P	0-928930-5
																				B			SEL. GOLD PLATED 1 2	CuZn30	0-928931-4	P	0-928930-4
																				A			PLAIN	CuZn30	0-928931-3	P	0-928930-3
																				B			PRETINNED min.1µm	CuZn30	0-928931-2	P	0-928930-2
																				B			SEL. SILVER PLATED 3	CuZn30	0-928931-1	P	0-928930-1
	169400 WITH DIE SET: mit Matrize: 734262 - 0	878402-0	4.4	3.8	2.3	4.0	3.1	1.8	4.9	4.7	2.6	4.0	3.8	1.8	1.15	0.3	7.2	5.6	4.0	B	Ø1.8 - 2.9	1.0 - 2.5 FLR	PRETINNED min.1µm	CuSn4	0-928794-5	R	0-928781-5
																				B			SEL. GOLD PLATED 1 2	CuZn30	8 ~~0-928794-4~~	R	8 ~~0-928781-4~~
																				A			PLAIN	CuZn30	8 ~~0-928794-3~~	R	8 ~~0-928781-3~~
																				B			PRETINNED min.1µm	CuZn30	0-928794-2	R	0-928781-2
																				B			SEL. SILVER PLATED 3	CuZn30	8 ~~0-928794-1~~	R	8 ~~0-928781-1~~
	N/A	878227-0	4.8	4.2	2.4	4.0	3.1	1.9	5.3	4.8	3.1	4.0	3.8	1.9	1.15	0.4	7.2	5.6	4.0	B	Ø2.3 - 3.5 RB-Leitung	1.5 - 3 FLR	PRETINNED min.1µm	CuSn4	8 ~~0-928924-5~~	R	8 ~~0-927893-5~~
																				B			SEL. SILVER PLATED 3	CuSn4	8 ~~0-928924-4~~	R	8 ~~0-927893-4~~
																				A			PLAIN	CuSn4	8 ~~0-928924-3~~	R	8 ~~0-927893-3~~
																				B			SEL. GOLD PLATED 1 2	CuSn4	8 ~~0-928924-2~~	R	8 ~~0-927893-2~~
																				B			PRETINNED min.1µm	CuZn30	8 ~~0-928924-1~~	R	8 ~~0-927893-1~~
	N/A	N/A	3.3	3.1	(1.8)	3.0	2.2	1.2	3.65	3.6	2.0	3.0	2.8	1.2	0.65	0.3	6.2	4.6	3.0	B	Ø1.6 - 2.2 RB-Leitung	0.5 - 1.0 FLR	PRETINNED min.1µm	CuSn4	0-928923-5	S	0-927892-5
																				B			SEL. SILVER PLATED 3	CuSn4	8 ~~0-928923-4~~	S	8 ~~0-927892-4~~
																				A			PLAIN	CuSn4	8 ~~0-928923-3~~	S	8 ~~0-927892-3~~
																				B			SEL. GOLD PLATED 1 2	CuSn4	8 ~~0-928923-2~~	S	8 ~~0-927892-2~~
																				B			PRETINNED min.1µm	CuZn30	0-928923-1	S	0-927892-1

NOTES:
Bemerkungen

1. CONTACT AREA min.0.75 µm Au OVER min.1.25 µm Ni
   Kontaktbereich min.0.75 µm Au über min.1.25 µm Ni
2. CRIMP AREA 1-2 µm Sn OVER min.0.05 µm Ni
   Crimpbereich 1-2 µm Sn über min.0.05 µm Ni
3. Min.3 µm Ag IN LOCALIZED AREA. FLASH Ag ON REMAINDER. BOTH OVER min.1.25 µm Ni
   Min.3 µm Ag im lokalisierte Bereich. Rest flashversilbert. beide über min.1.25 µm Ni
4. ALL VERSIONS SPLICE FREE EXCEPT OF 5
   Alle Versionen Splice-free außer
5. SPLICE ACCORDING TO TYCO-SPEC. 118-10107 SPLICE ADDITIONAL MARK WITH RED SPLICE-STICKER ON THE INTERLEAVING PAPER AND ON THE REEL
   Splice nach Tyco-Spec. 118-10107 zusätzlich Splice mit rotem Splice-Aufkleber auf dem Zwischenlagenpapier und auf dem Reel kennzeichnen
6. TO BE MEASURED BY DIMENSION 2 mm
   Bei Ausstellung 2 mm
7. REELING TYPE

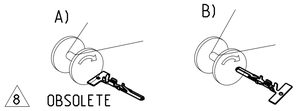

8. OBSOLETE

THIS DRAWING IS A CONTROLLED DOCUMENT.

DIMENSIONS: mm

TOLERANCES UNLESS OTHERWISE SPECIFIED: ISO 2768 -H E
0 PLC ± 0.2
1 PLC ± 0.2
2 PLC ± 0.2
3 PLC ± -
4 PLC ± -
ANGLES ± 1.5°

MATERIAL: see table / siehe Tabelle
FINISH: see table / siehe Tabelle

DRW	T. Konecny	21AUG2006
CHK	P.Hasek	6OCT2006
APVD	R.Vlcek	9OCT2006
PRODUCT SPEC	108-18299	
APPLICATION SPEC	114-18014	
WEIGHT	-	

TE Connectivity

NAME: PRODUCT GROUP DRAWING FOR 2.8 mm FASTIN-FASTON® TAB

SIZE	CAGE CODE	DRAWING NO	RESTRICTED TO
A1	00779	C-1670467	

CUSTOMER DRAWING | SCALE 5:1 | SHEET 1 OF 1 | REV A7

4805 (3/13)