# 2SC5904

## Silicon NPN triple diffusion mesa type

For Horizontal deflection output for TV, CRT monitor

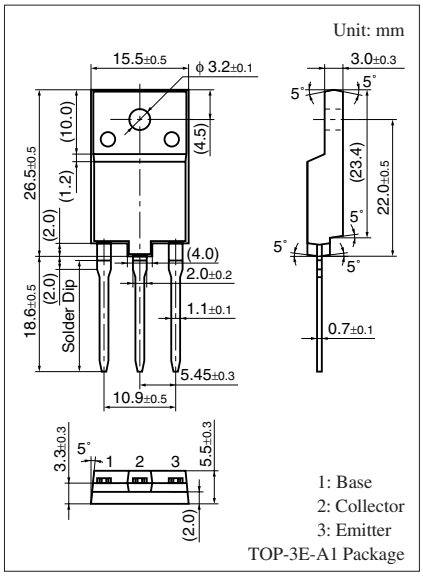


Marking Symbol: C5904

Internal Connection

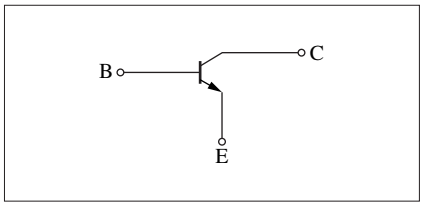


### ■ Features

- High breakdown voltage ($V_{CBO} \geq 1\,700$ V)
- High-speed switching ($t_f < 200$ nsec)
- Wide safe operation area

### ■ Absolute Maximum Ratings $T_C = 25°C$

| Parameter | Symbol | Rating | Unit |
|---|---|---|---|
| Collector-base voltage (Emitter open) | $V_{CBO}$ | 1 700 | V |
| Collector-emitter voltage (E-B short) | $V_{CES}$ | 1 700 | V |
| Collector-emitter voltage (Base open) | $V_{CEO}$ | 600 | V |
| Emitter-base voltage (Collector open) | $V_{EBO}$ | 7 | V |
| Base current | $I_B$ | 8 | A |
| Collector current | $I_C$ | 17 | A |
| Peak collector current * | $I_{CP}$ | 27 | A |
| Collector power dissipation | $P_C$ | 65 | W |
| $T_a = 25°C$ | | 3.5 | |
| Junction temperature | $T_j$ | 150 | °C |
| Storage temperature | $T_{stg}$ | −55 to +150 | °C |

Note) *: Non-repetitive peak collector current

### ■ Electrical Characteristics $T_C = 25°C \pm 3°C$

| Parameter | Symbol | Conditions | Min | Typ | Max | Unit |
|---|---|---|---|---|---|---|
| Collector-base cutoff current (Emitter open) | $I_{CBO}$ | $V_{CB} = 1\,000$ V, $I_E = 0$ | | | 50 | μA |
| | | $V_{CB} = 1\,700$ V, $I_E = 0$ | | | 1 | mA |
| Emitter-base cutoff current (Collector open) | $I_{EBO}$ | $V_{EB} = 7$ V, $I_C = 0$ | | | 50 | μA |
| Forward current transfer ratio | $h_{FE}$ | $V_{CE} = 5$ V, $I_C = 8.5$ A | 5 | | 12 | — |
| Collector-emitter saturation voltage | $V_{CE(sat)}$ | $I_C = 8.5$ A, $I_B = 2.13$ A | | | 3 | V |
| Base-emitter saturation voltage | $V_{BE(sat)}$ | $I_C = 8.5$ A, $I_B = 2.13$ A | | | 1.5 | V |
| Transition frequency | $f_T$ | $V_{CE} = 10$ V, $I_C = 0.1$ A, f = 0.5 MHz | | 3 | | MHz |
| Storage time | $t_{stg}$ | $I_C = 8.5$ A, Resistance loaded | | | 3.0 | μs |
| Fall time | $t_f$ | $I_{B1} = 2.13$ A, $I_{B2} = -4.25$ A | | | 0.2 | μs |

Note) Measuring methods are based on JAPANESE INDUSTRIAL STANDARD JIS C 7030 measuring methods for transistors.

$P_C$ — $T_a$

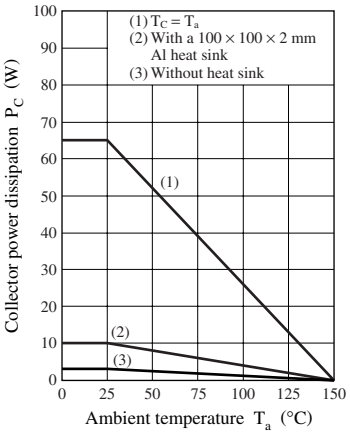


Safe operation area

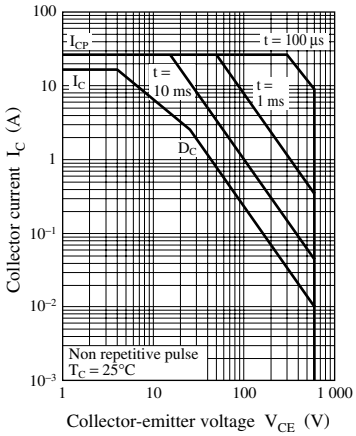


Safe operation area (Horizontal operation)

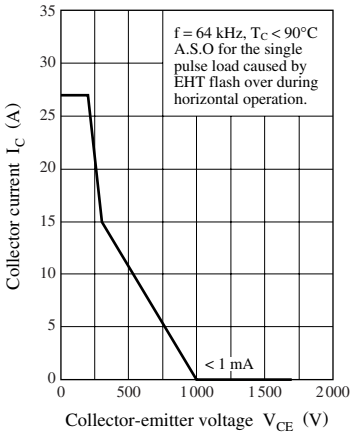

## Request for your special attention and precautions in using the technical information and semiconductors described in this material

(1) An export permit needs to be obtained from the competent authorities of the Japanese Government if any of the products or technical information described in this material and controlled under the "Foreign Exchange and Foreign Trade Law" is to be exported or taken out of Japan.

(2) The technical information described in this material is limited to showing representative characteristics and applied circuits examples of the products. It neither warrants non-infringement of intellectual property right or any other rights owned by our company or a third party, nor grants any license.

(3) We are not liable for the infringement of rights owned by a third party arising out of the use of the technical information as described in this material.

(4) The products described in this material are intended to be used for standard applications or general electronic equipment (such as office equipment, communications equipment, measuring instruments and household appliances).
Consult our sales staff in advance for information on the following applications:
- Special applications (such as for airplanes, aerospace, automobiles, traffic control equipment, combustion equipment, life support systems and safety devices) in which exceptional quality and reliability are required, or if the failure or malfunction of the products may directly jeopardize life or harm the human body.
- Any applications other than the standard applications intended.

(5) The products and product specifications described in this material are subject to change without notice for modification and/or improvement. At the final stage of your design, purchasing, or use of the products, therefore, ask for the most up-to-date Product Standards in advance to make sure that the latest specifications satisfy your requirements.

(6) When designing your equipment, comply with the guaranteed values, in particular those of maximum rating, the range of operating power supply voltage, and heat radiation characteristics. Otherwise, we will not be liable for any defect which may arise later in your equipment.
Even when the products are used within the guaranteed values, take into the consideration of incidence of break down and failure mode, possible to occur to semiconductor products. Measures on the systems such as redundant design, arresting the spread of fire or preventing glitch are recommended in order to prevent physical injury, fire, social damages, for example, by using the products.

(7) When using products for which damp-proof packing is required, observe the conditions (including shelf life and amount of time let standing of unsealed items) agreed upon when specification sheets are individually exchanged.



2003 SEP