PRODUCT SPECIFICATION

Model No.: FYS-40011C/DXX-XX

Descriptions & Features:
■4.00 Inch (101.60mm) digit height Single Digit Display
■Case mold type.
■RoHS compliant.
■Low current operation
■Low power consumption.
■Easy mounting on P.C. board or socket.

CUSTOMER APPROVED SIGNATURES	APPROVED BY	CHECKED BY	PREPARED BY

NINGBO FORYARD OPTOELECTRONICS CO.,LTD
Add:NO.115 Qixin Road Ningbo Zhejiang China **Zip:**315051
Tel: 0086-574-87933652 87927870 87922206
Fax: 0086-574-87927917
E-mail: Sales@foryard.com (General)
Http://www.foryard.com

Model No.: FYS-40011C/DXX-XX

■ -XX: REF Surface / Epoxy color

Color / Number	0	1	2	3	4
REF Surface Color	○ White	○ Black	○ Gray	○ Red	○ Green
Epoxy Color	○ Water Clear	○ White	○ Red	○ Green	○ Yellow

■ Mechanical Dimensions

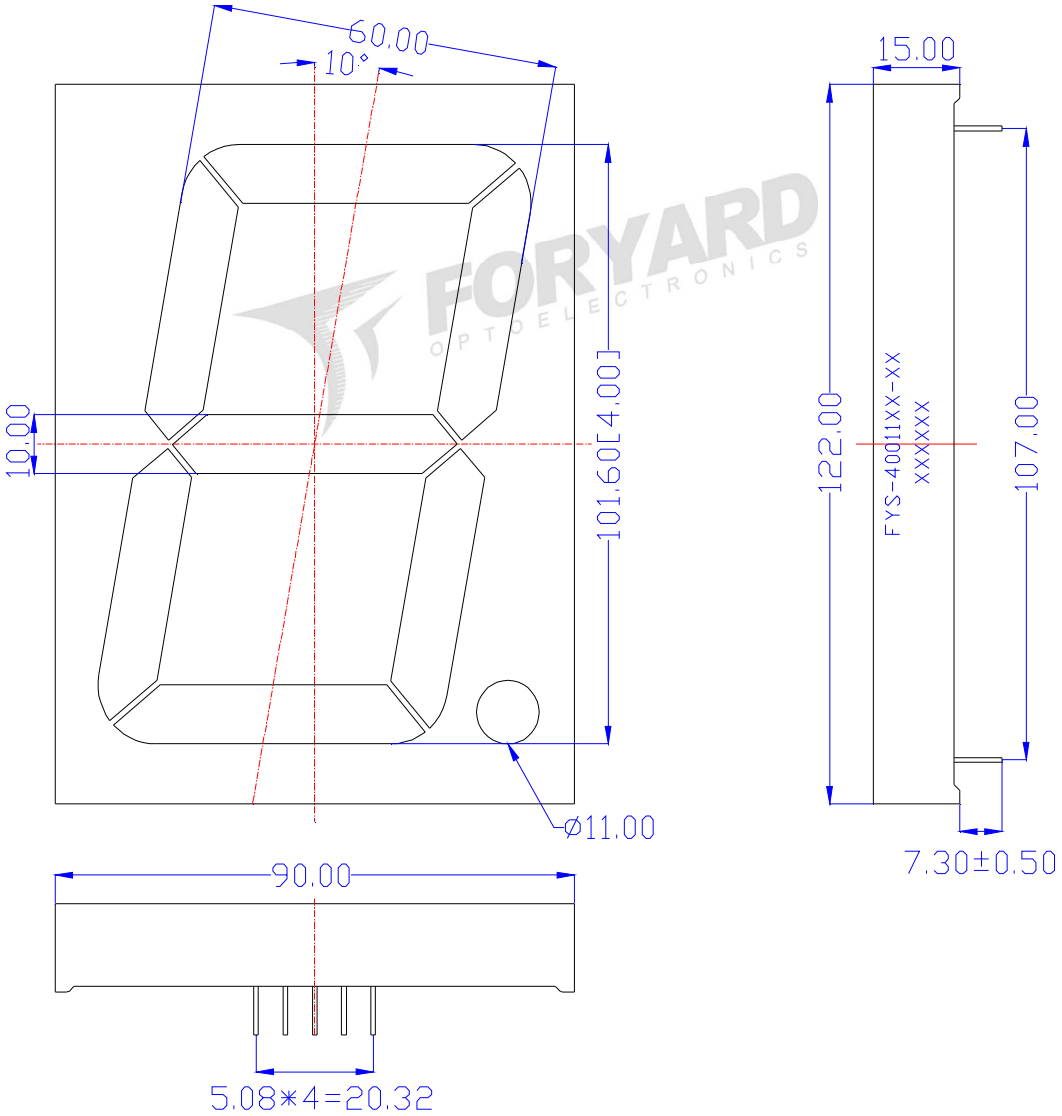

Notes:

1. All pins are Φ0.80[.031]mm
2. Dimension in millimeter [inch], tolerance is ±0.25 [.010] and angle is ±1° unless otherwise noted.
3. Bending≤Length*1%.
4. The specifications,characteristics and technical data described in the datasheet are subject to change without prior notice.

Model No.: FYS-40011C/DXX-XX

■ All Light On Segments Feature & Pin Position

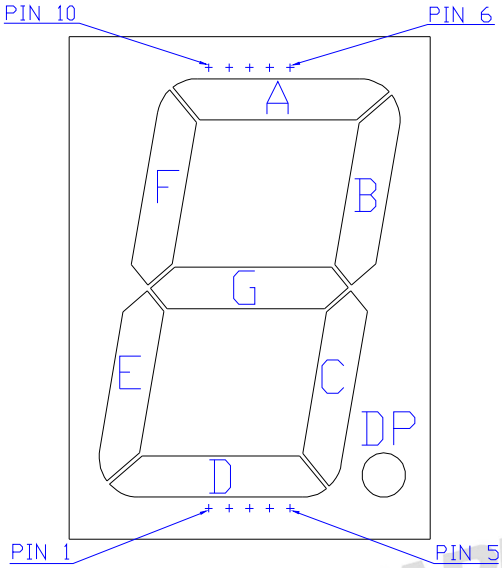

■ Internal Circuit Diagrams

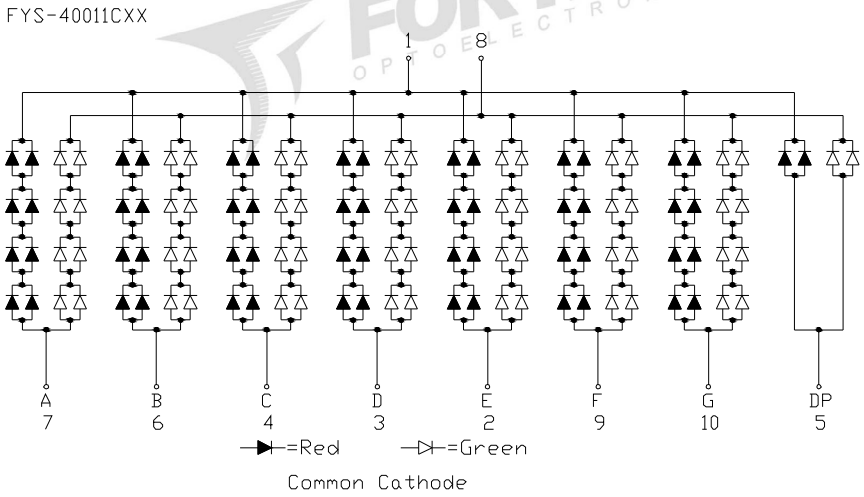

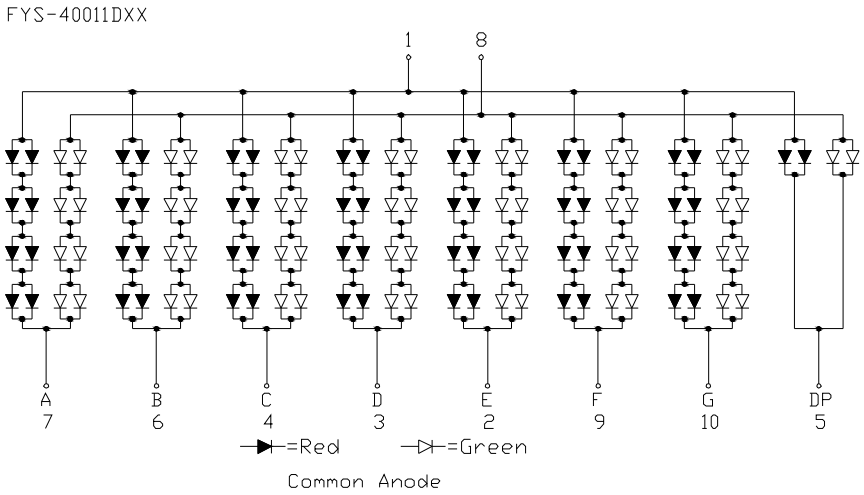

Model No.: FYS-40011C/DXX-XX

■ Absolute maximum ratings

(Ta=25℃)

Parameter	Symbol	Test Condition	Value		Unit
			Min	Max	
Reverse Voltage	VR	IR=30	5	—	V
Forward Current	IF	—	—	30	mA
Power Dissipation	Pd	—	—	100	mW
Pulse Current	Ipeak	Duty=0.1mS,1KHz	—	150	mA
Operating Temperature	Topr	—	-40	+85	℃
Storage Temperature	Tstr	—	-40	+85	℃

■ Electrical-Optical Characteristics

● Color Code & Chip Characteristics:(Test Condition:IF=20mA) (Ta=25℃)

Emitting Color		Dice Material	Peak Wave Length(λ_P)	Spectral Line halfwidth($\Delta\lambda$1/2)	Forward Voltage(VF) Unit:V		Luminous Intensity (Iv) Unit:mcd
					Typ	Max	
Standard brightness							
H	Red	GaP	700nm	90nm	2.00	2.50	1
S	Hi Red	AlGaAs/SH	660nm	20nm	1.80	2.50	15~20
D	Super Red	AlGaAs/DH	650nm	20nm	1.90	2.50	26~38
E	Orange	GaAsP	625nm	35nm	1.90	2.50	14~20
A	Amber	GaAsP	610nm	35nm	1.90	2.50	13~18
Y	Yellow	GaAsP	590nm	35nm	1.90	2.50	13~18
G	Green	GaP	570nm	10nm	1.90	2.50	14~18
B	Blue	InGaN	430nm	60nm	3.40	4.40	0.7~1(mw)
			460nm		2.80	3.80	6~12(mw)
			470nm		2.80	3.80	6~12(mw)
PG	Pure Green	InGaN	520nm	36nm	2.80	3.80	4~6(mw)
Ultra brightness							
UHR	Ultra Hi Red	AlGaInP	640nm	20nm	1.90	2.50	30~60
UR	Ultra Red	AlGaInP	635nm	20nm	1.90	2.50	60~100
UE	Ultra Orange	AlGaInP	625nm	20nm	1.90	2.50	60~120
UA	Ultra Amber	AlGaInP	610nm	20nm	1.90	2.50	40~100~150
UY	Ultra Yellow	AlGaInP	590nm	20nm	1.90	2.50	50~140~190
UG	Ultra Green	AlGaInP	570nm	30nm	1.90	2.50	30~60~80
PG	Ultra Pure Green	InGaN	520nm	36nm	2.80	3.80	260~310
BG	Ultra Bluish Green	InGaN	505nm	36nm	2.80	3.80	260~310
UB	Ultra Blue	InGaN	460nm	30nm	2.80	3.80	80~90~120
			470nm	30nm	2.80	3.80	80~90~120
Segment-to-Segment Luminous Intensity ratio(Iv-M) 1.5:1							

Note:

1.Luminous Intensity is based on the Foryard standards.

2.Pay attention about static for InGaN

Model No.: FYS-40011C/DXX-XX

■ Packing Diagram

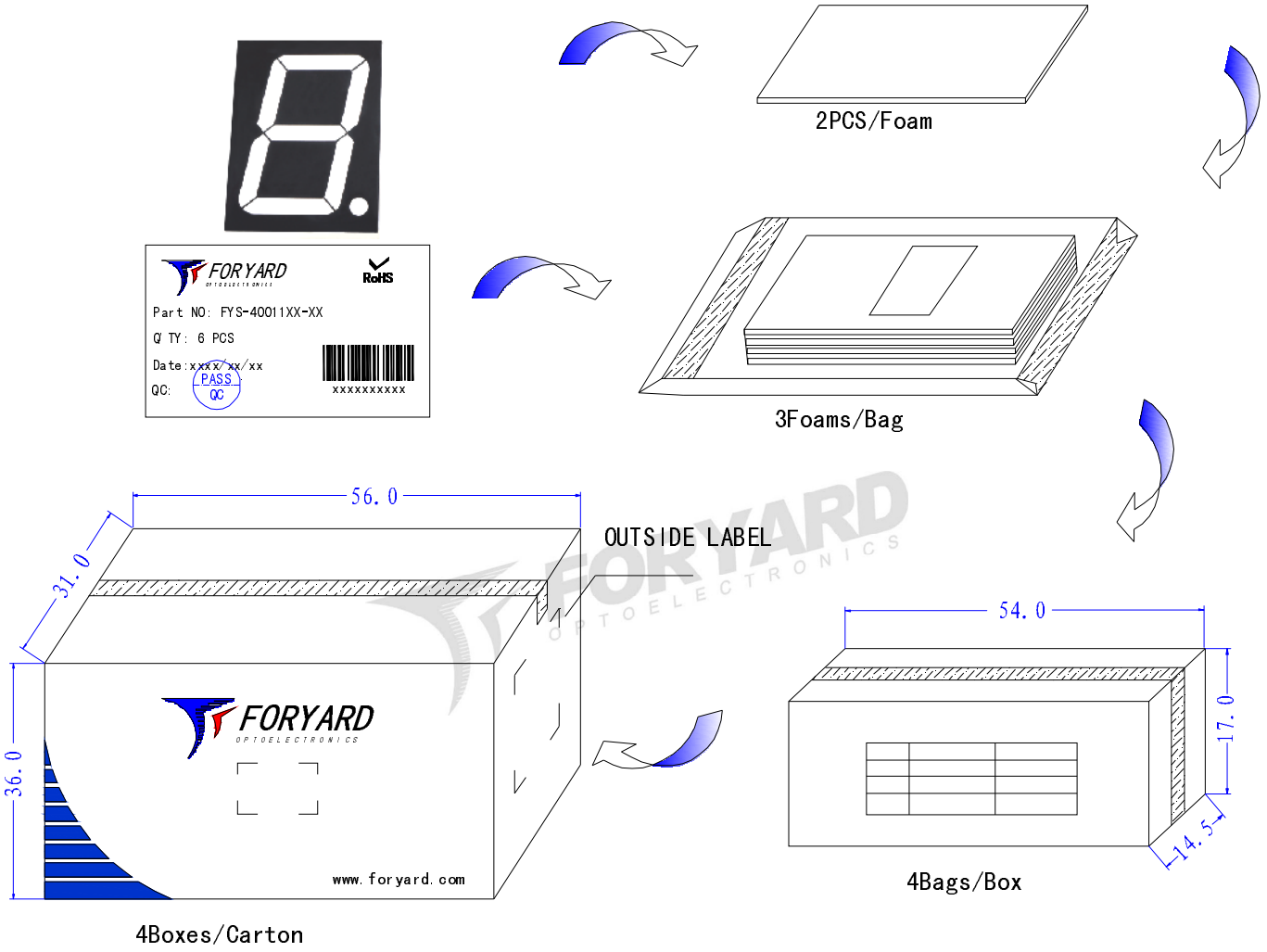

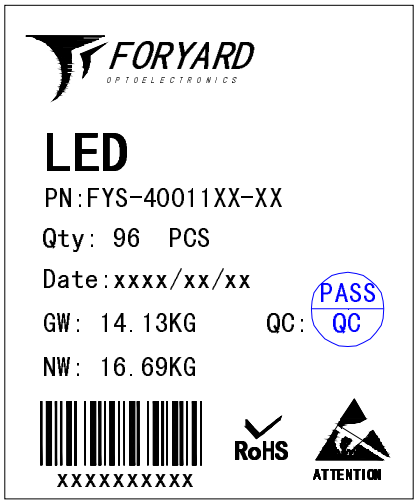

OUTSIDE LABEL

Note: The specifications are subject to change without notice. Please contact us for updated information.