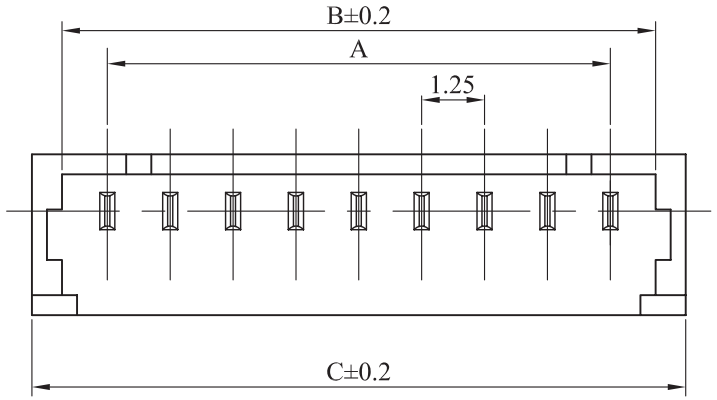

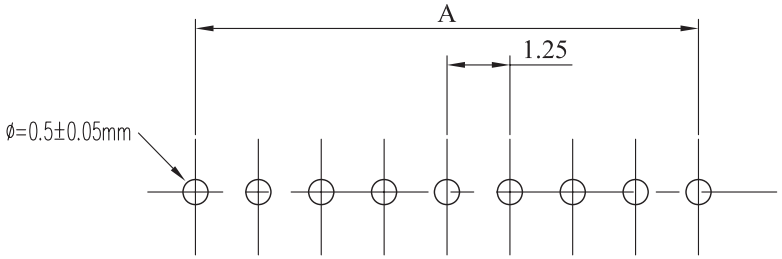

RECOMMENDED PC BOARD HOLE DIMM.

LOCKING WINDOW:
ONE PLACE FOR 2 AND 3 CKT.
AND TWO PLACES FOR MORE THAN 3 CKT.

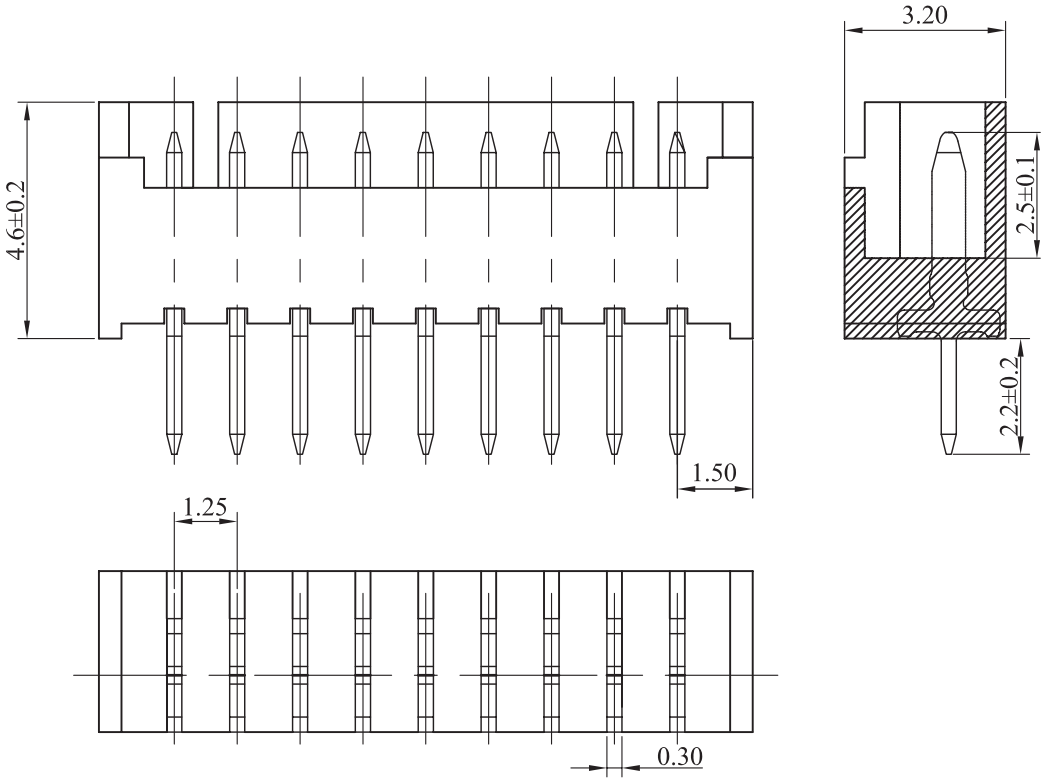

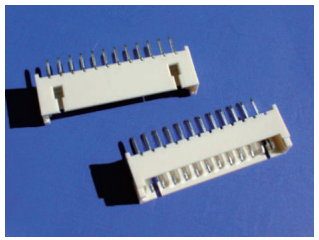

CKT.	A	B	C
2	1.25	3.15	4.25
3	2.50	4.40	5.50
4	3.75	5.65	6.75
5	5.00	6.90	8.00
6	6.25	8.15	9.25
7	7.50	9.40	10.50
8	8.75	10.65	11.75
9	10.00	11.90	13.00
10	11.25	13.15	14.25
11	12.50	14.40	15.50
12	13.75	15.65	16.75
13	15.00	16.90	18.00
14	16.25	18.15	19.25
15	17.50	19.40	20.50

MATERIAL:

WAFER:HIGH TEMPERA TURE PLASTIC
NYLON46 UL94V-0
PIN:HIGH STRENGTH BRASS
WITH TIN OVER NICKEL PLATED

SPECIFICATION:

CURRENT RATE: 1 AMP
IUSULATION RESISTANCE: 500 M MIN
CONTACT RESISTANCE: 20 M MAX
DIELECTRIC VOLTAGE: 500 V AC FOR ONE MINUTE
OPERATION TEMPERATURE: -25℃ ~ +85℃

RoHS Compliant

TOLERANCES ARE

X. ±
.X ± 0.50
.XX ± 0.10
.XXX ±
ANG ±

DESCRIPTION: WIRE TO BOARD 1.25mm WAFER DIP 180˚