WINSTAR Display

OLED SPECIFICATION

Model No:

WEH001602DLPP5N00000

WINSTAR DISPLAY Co., Ltd.

SPECIFICATION Version: L

CUSTOMER :

MODULE NO. : WEH001602DLPP5N00000

APPROVED BY: **(FOR CUSTOMER USE ONLY)**	

SALES BY	APPROVED BY	CHECKED BY	PREPARED BY
RELEASE DATE:			

■APPROVAL FOR SPECIFICATIONS ONLY

□APPROVAL FOR SPECIFICATIONS AND SAMPLE

WINSTAR DISPLAY Co., Ltd.

MODEL NO：

RECORDS OF REVISION			DOC. FIRST ISSUE
VERSION	DATE	REVISED PAGE NO.	SUMMARY
0	2010/04/20		First release
A	2010/10/26		Correct Shift left
B	2010/12/13		68 series only
C	2011/03/03		Remove IC information.
D	2011/11/07		Correct count drawing.
E	2013/12/10		Add information of Module Life Time.
F	2014/02/11		Correct VIH / VIL.
G	2014/06/12		Add Low Temperature storage.
H	2015/01/15		Modify Block Diagram.
I	2016/03/23		Modify Static electricity test
J	2019/04/19		Modify Reliability test Condition&General Specification Add IC,Interface,Size
K	2019/08/29		Modify Precautions in use of OLED Modules
L	2019/12/18		Modify Reliability Test and measurement conditions & Inspection specification:" Accept no dense" modify to "ignore"& Precautions

WINSTAR DISPLAY Co., Ltd.

Contents

1.Module Classification Information

2.General Specification

3.Contour Drawing & Block Diagram

4.Interface Pin Function

5.Absolute Maximum Ratings

6.Electrical Characteristics

7.Optical Characteristics

8.OLED Lifetime

9.Reliability

10.Inspection specification

11.Precautions in use of OLED Modules

WINSTAR DISPLAY Co., Ltd.

1.Module Classification Information

W	E	H	001602	D	L	P	P	5	N	0	0	0	00
①	②	③	④	⑤	⑥	⑦	⑧	⑨	⑩	⑪	⑫	⑬	⑭

1	Brand：WINSTAR DISPLAY CORPORATION			
2	E：OLED			
3	Display Type	H：COB Character	G：COB Graphic	
		O：COG	F：COG + FR	
		P：COG + FR + PCB	X：TAB	
		A：COG + PCB		
4	Dot Matrix：Character 16 words, 02 Lines.			
5	Serials code			
6	Emitting Color	A：Amber	R：Red	C：Full Color
		B：Blue	W：White	
		G：Green	L：Yellow	
		S：Sky Blue	X：Dual Color	
7	Polarizer	P：With Polarizer; N: Without Polarizer A：Anti-glare Polarizer		
8	Display Mode	P：Passive Matrix ; N：Active Matrix		
9	Driver Voltage	3：3.0~3.3V ; 5：5.0V		
10	Touch Panel	N：Without touch panel; T: With touch panel		
11	Product type	0：Standard 1：Daylight Readable 2：Transparent OLED (TOLED) 3：Flexible OLED (FOLED) 4：OLED Lighting		
12	Inspection Grade	0：Standard 2：Special grade C：Automotive grade Y：Consumer grade		
13	Option	0：Default ; F：ZIF FPC ; H：Hot bar FPC; D：Demo Kit		
14	Serial No.	Serial number(00~ZZ)		

WINSTAR DISPLAY Co., Ltd.

2.General Specification

Item	Dimension	Unit
Number of Characters	16 characters x 2 Lines	–
Module dimension	85.0 x 30.0 x 10.0(MAX)	mm
View area	66.0 x 16.0	mm
Active area	56.95 x 11.85	mm
Dot size	0.55 x 0.65	mm
Dot pitch	0.60 x 0.70	mm
Character size	2.95 x 5.55	mm
Character pitch	3.6 x 6.3	mm
Panel type	OLED , Yellow	
Duty	1/16	
IC	WS0010	
Interface	6800	
Size	2.29 inch	

WINSTAR DISPLAY Co., Ltd.

3.Contour Drawing & Block Diagram

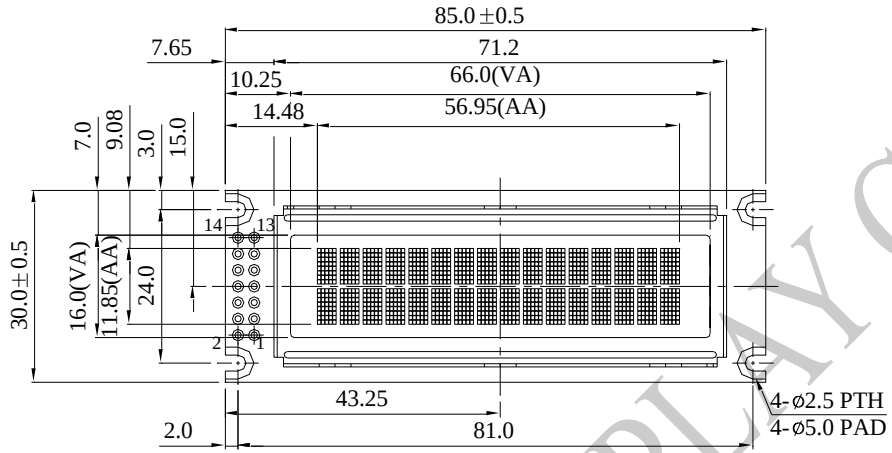

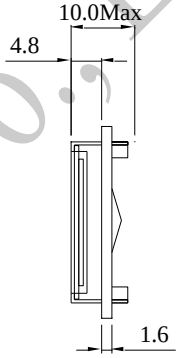

PIN NO.	SYMBOL
1	VDD
2	VSS
3	NC
4	RS
5	R/$\overline{W}$
6	E
7	DB0
8	DB1
9	DB2
10	DB3
11	DB4
12	DB5
13	DB6
14	DB7

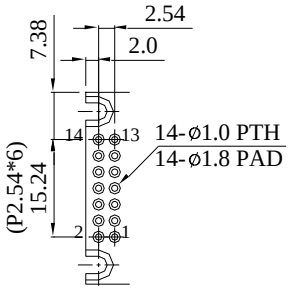

PIN DETAIL

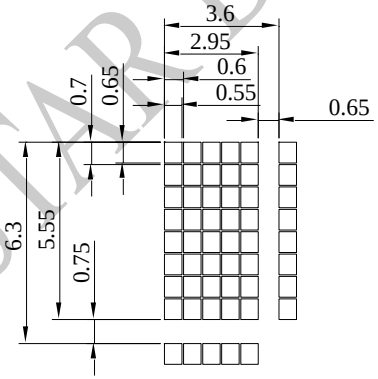

DOT SIZES
SCALE 5/1

The non-specified tolerance of dimension is ±0.3 mm .

WINSTAR DISPLAY Co., Ltd.

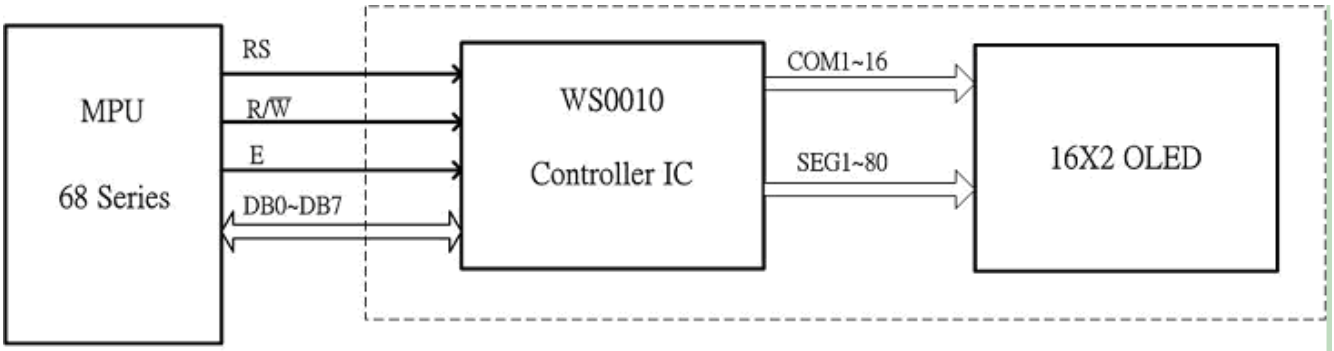

Address Format	DB7	DB6	DB5	DB4	DB3	DB2	DB1	DB0
CA (Character Address)	1	ADD6	ADD5	ADD4	ADD3	ADD2	ADD1	ADD0

1	2	3	4	……	……	13	14	15	16
CA=10000000b	CA=10000001b	CA=10000010b	CA=10000011b	……	……	CA=10001100b	CA=10001101b	CA=10001110b	CA=10001111b
CA=11000000b	CA=11000001b	CA=11000010b	CA=11000011b	……	……	CA=11001100b	CA=11001101b	CA=11001110b	CA=11001111b

WINSTAR DISPLAY Co., Ltd.

4.Interface Pin Function

Pin No.	Symbol	Level	Description
1	VDD	5.0V	Supply Voltage for logic
2	VSS	0V	Ground
3	NC	—	
4	RS	H/L	H: DATA, L: Instruction code
5	R/W	H/L	H: Read(Module→MPU) L: Write(MPU→Module)
6	E	H,H→L	Chip enable signal
7	DB0	H/L	Data bit 0
8	DB1	H/L	Data bit 1
9	DB2	H/L	Data bit 2
10	DB3	H/L	Data bit 3
11	DB4	H/L	Data bit 4
12	DB5	H/L	Data bit 5
13	DB6	H/L	Data bit 6
14	DB7	H/L	Data bit 7

WINSTAR DISPLAY Co., Ltd.

5.Absolute Maximum Ratings

Item	Symbol	Min	Max	Unit	Notes
Operating Temperature	TOP	-40	+80	°C	-
Storage Temperature	TST	-40	+85	°C	-
Supply Voltage For Logic	VDD-VSS	-0.3	5.3	V	-

WINSTAR DISPLAY Co., Ltd.

6.Electrical Characteristics

Item	Symbol	Condition	Min	Typ	Max	Unit
Supply Voltage For Logic	VDD-VSS	—	4.8	5.0	5.3	V
Input High Volt.	VIH	—	0.8xVDD	—	VDD	V
Input Low Volt.	VIL	—	GND	—	0.2xVDD	V
Output High Volt.	VOH	IOH=-0.5mA	0.8xVDD	—	VDD	V
Output Low Volt.	VOL	IOL=0.5mA	GND	—	0.2xVDD	V
50% Check Board Operating Current	IDD	VDD=5V	30	35	42	mA

Note: When you use 5V for Vdd please don't use 3V or 3.3V for logic I/O this will cause module does not work.

WINSTAR DISPLAY Co., Ltd.

7.Optical Characteristics

Item	Symbol	Condition	Min	Typ	Max	Unit
View Angle	(V)θ		160			deg
	(H)φ		160			deg
Contrast Ratio	CR	Dark	2000:1		—	—
Response Time	T rise	—		10		μs
	T fall	—		10		μs
Display with 50% check Board Brightness			100	120		cd/m2
CIEx(Yellow)		(CIE1931)	0.45	0.47	0.49	
CIEy(Yellow)		(CIE1931)	0.48	0.50	0.52	

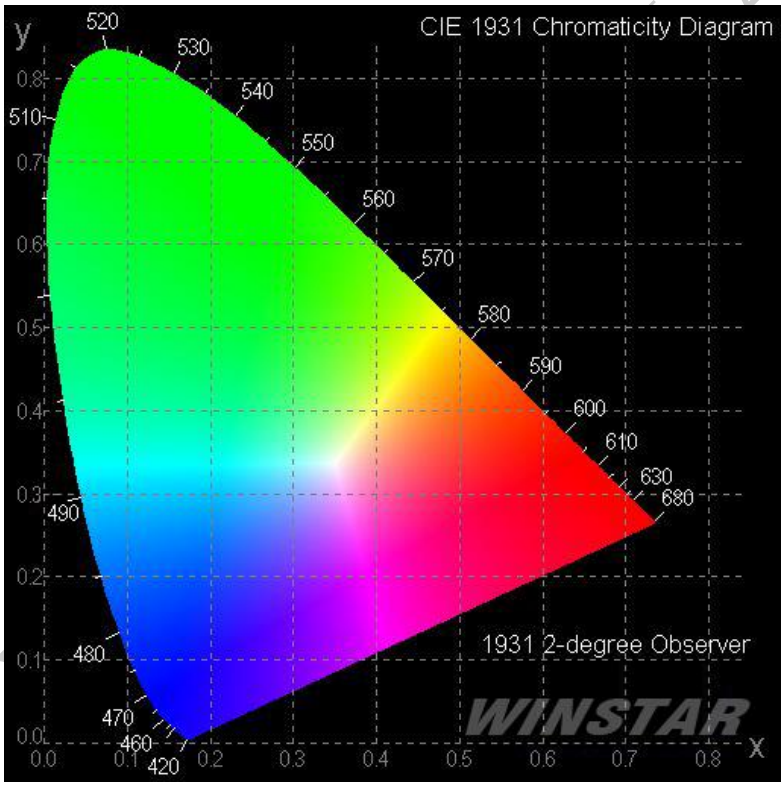

AY Co., Ltd.

8.OLED Lifetime

ITEM	Conditions	Min	Typ	Remark
Operating Life Time	Ta=25°C / Initial 50% check board brightness Typical Value	80,000 Hrs	100,000 Hrs	Note

Notes:
1. Life time is defined the amount of time when the luminance has decayed to <50% of the initial value.
2. This analysis method uses life data obtained under accelerated conditions to extrapolate an estimated probability density function (*pdf*) for the product under normal use conditions.
3. Screen saving mode will extend OLED lifetime.

WINSTAR DISPLAY Co., Ltd.

9.Reliability

Content of Reliability Test

Environmental Test			
Test Item	**Content of Test**	**Test Condition**	**Applicable Standard**
High Temperature storage	Endurance test applying the high storage temperature for a long time.	85°C 240hrs	——
Low Temperature storage	Endurance test applying the low storage temperature for a long time.	-40°C 240hrs	——
High Temperature Operation	Endurance test applying the electric stress (Voltage & Current) and the thermal stress to the element for a long time.	80°C 240hrs	——
Low Temperature Operation	Endurance test applying the electric stress under low temperature for a long time.	-40°C 240hrs	——
High Temperature/ Humidity Storage	Endurance test applying the high temperature and high humidity storage for a long time.	60°C,90%RH 240hrs	——
High Temperature/ Humidity Operation	Endurance test applying the high temperature and high humidity Operation for a long time.	60°C,90%RH 120hrs	——
Temperature Cycle	Endurance test applying the low and high temperature cycle. -40°C 25°C 80°C 30min 5min 30min	-40°C /80°C 30 cycles	——
Mechanical Test			
Vibration test	Endurance test applying the vibration during transportation and using.	Frequency:10~55Hz amplitude:1.5mm Time:0.5hrs/axis Test axis:X,Y,Z	——
Others			
Static electricity test	Endurance test applying the electric stress to the finished product housing.	Air Discharge model ±4kv,10 times	——

*** Supply voltage for OLED system =Operating voltage at 25°C

WINSTAR DISPLAY Co., Ltd.

Test and measurement conditions

1. All measurements shall not be started until the specimens attain to temperature stability. After the completion of the described reliability test, the samples were left at room temperature for 2 hrs prior to conducting the failure test at 23±5°C; 55±15% RH.
2. All-pixels on/off exchange is used as operation test pattern.
3. The degradation of Polarizer are ignored for High Temperature storage, High Temperature/ Humidity Storage, Temperature Cycle

Evaluation criteria

1. The function test is OK.
2. No observable defects.
3. Luminance: > 50% of initial value.
4. Current consumption: within ± 50% of initial value.

APPENDIX:

RESIDUE IMAGE

Because the pixels are lighted in different time, the luminance of active pixels may reduce or differ from inactive pixels. Therefore, the residue image will occur. To avoid the residue image, every pixel needs to be lighted up uniformly.

WINSTAR DISPLAY Co., Ltd.

10.Inspection specification

Inspection Standard:

MIL-STD-105E table normal inspection single sample level II.

Definition

1 Major defect : The defect that greatly affect the usability of product.
2 Minor defect : The other defects, such as cosmetic defects, etc.
Definition of inspection zone:

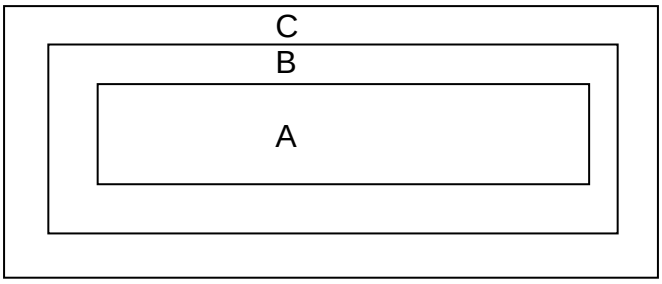

Zone A: Active Area
Zone B: Viewing Area except Zone A
Zone C: Outside Viewing Area
Note: As a general rule, visual defects in Zone C are permissible, when it is no trouble of quality and assembly to customer`s product.

Inspection Methods

1 The general inspection : Under fluorescent light illumination: 750~1500 Lux, about 30cm viewing distance, within 45º viewing angle, under 25±5°C.
2 The luminance and color coordinate inspection : By SR-3 or BM-7 or the equal equipments, in the dark room, under 25±5°C.

NO	Item	Criterion	AQL
01	Electrical Testing	1.1 Missing vertical, horizontal segment, segment contrast defect. 1.2 Missing character , dot or icon. 1.3 Display malfunction. 1.4 No function or no display. 1.5 Current consumption exceeds product specifications. 1.6 OLED viewing angle defect. 1.7 Mixed product types. 1.8 Contrast defect.	0.65
02	Black or white spots on OLED (display only)	2.1 White and black spots on display ≦ 0.25mm, no more than three white or black spots present. 2.2 Densely spaced: No more than two spots or lines within 3mm.	2.5

WINSTAR DISPLAY Co., Ltd.

<table>
<tr><th>NO</th><th>Item</th><th>Criterion</th><th>AQL</th></tr>
<tr><td rowspan="2">03</td><td>OLED black spots, white spots, contamination (non-display)</td><td>3.1 Round type :
As following drawing
Φ=(x + y) / 2
 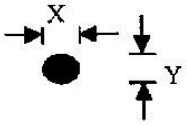

<table>
<tr><th>SIZE</th><th>Acceptable QTY</th><th>Zone</th></tr>
<tr><td>Φ≦0.10</td><td>ignore</td><td>A+ B,</td></tr>
<tr><td>0.10＜Φ≦0.20</td><td>2</td><td>A+ B</td></tr>
<tr><td>0.20＜Φ≦0.25</td><td>1</td><td>A+ B</td></tr>
<tr><td>0.25＜Φ</td><td>0</td><td>A+ B</td></tr>
</table></td><td>2.5</td></tr>
<tr><td></td><td>3.2 Line type : (As following drawing)
 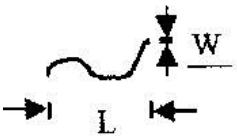

<table>
<tr><th>Length</th><th>Width</th><th>Acceptable Q TY</th><th>Zone</th></tr>
<tr><td>---</td><td>W≦0.02</td><td>ignore</td><td>A+B</td></tr>
<tr><td>L≦3.0</td><td>0.02＜W≦0.03</td><td rowspan="2">2</td><td>A+B</td></tr>
<tr><td>L≦2.5</td><td>0.03＜W≦0.05</td><td>A+B</td></tr>
<tr><td>---</td><td>0.05＜W</td><td>As round type</td><td></td></tr>
</table></td><td>2.5</td></tr>
<tr><td>04</td><td>Polarizer bubbles</td><td>If bubbles are visible, judge using black spot specifications, not easy to find, must check in specify direction.
<table>
<tr><th>Size Φ</th><th>Acceptable Q TY</th><th>Zone</th></tr>
<tr><td>Φ≦0.20</td><td>ignore</td><td>A+B</td></tr>
<tr><td>0.20＜Φ≦0.50</td><td>3</td><td>A+B</td></tr>
<tr><td>0.50＜Φ≦1.00</td><td>2</td><td>A+B</td></tr>
<tr><td>1.00＜Φ</td><td>0</td><td>A+B</td></tr>
<tr><td>Total Q TY</td><td>3</td><td></td></tr>
</table></td><td>2.5</td></tr>
<tr><td>05</td><td>Scratches</td><td>Follow NO.3 OLED black spots, white spots, contamination.</td><td></td></tr>
</table>

WINSTAR DISPLAY Co., Ltd.

<table>
<tr><th>NO</th><th>Item</th><th>Criterion</th><th>AQL</th></tr>
<tr><td>06</td><td>Chipped glass</td><td>
Symbols Define:
x: Chip length y: Chip width z: Chip thickness
k: Seal width t: Glass thickness a: OLED side length
L: Electrode pad length:
6.1 General glass chip :
6.1.1 Chip on panel surface and crack between panels:
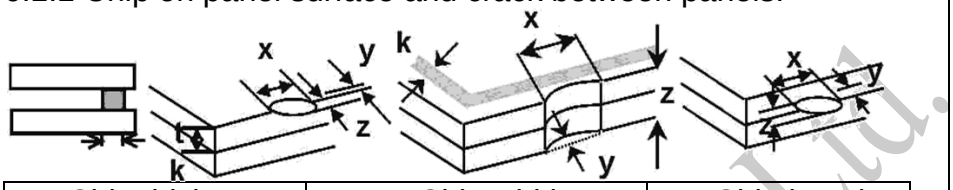

<table>
<tr><th>z: Chip thickness</th><th>y: Chip width</th><th>x: Chip length</th></tr>
<tr><td>Z≦1/2t</td><td>Not over viewing area</td><td>x≦1/8a</td></tr>
<tr><td>1/2t＜z≦2t</td><td>Not exceed 1/3k</td><td>x≦1/8a</td></tr>
</table>
⊙If there are 2 or more chips, x is total length of each chip.

6.1.2 Corner crack:
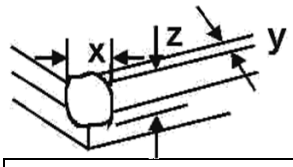

<table>
<tr><th>z: Chip thickness</th><th>y: Chip width</th><th>x: Chip length</th></tr>
<tr><td>Z≦1/2t</td><td>Not over viewing area</td><td>x≦1/8a</td></tr>
<tr><td>1/2t＜z≦2t</td><td>Not exceed 1/3k</td><td>x≦1/8a</td></tr>
</table>
⊙If there are 2 or more chips, x is the total length of each chip.
</td><td>2.5</td></tr>
<tr><td>06</td><td>Glass crack</td><td>
Symbols :
x: Chip length y: Chip width z: Chip thickness
k: Seal width t: Glass thickness a: OLED side length
L: Electrode pad length
6.2 Protrusion over terminal :
6.2.1 Chip on electrode pad :
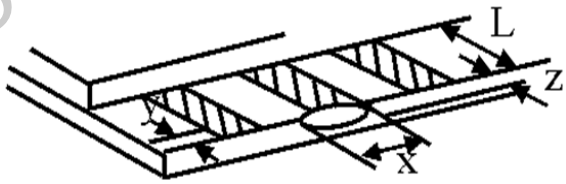

<table>
<tr><th>y: Chip width</th><th>x: Chip length</th><th>z: Chip thickness</th></tr>
<tr><td>y≦0.5mm</td><td>x≦1/8a</td><td>0 ＜ z ≦ t</td></tr>
</table>
</td><td>2.5</td></tr>
</table>

WINSTAR DISPLAY Co., Ltd.

<table>
<tr><th>NO</th><th>Item</th><th>Criterion</th><th>AQL</th></tr>
<tr><td>06</td><td>Glass crack</td><td>6.2.2 Non-conductive portion:
 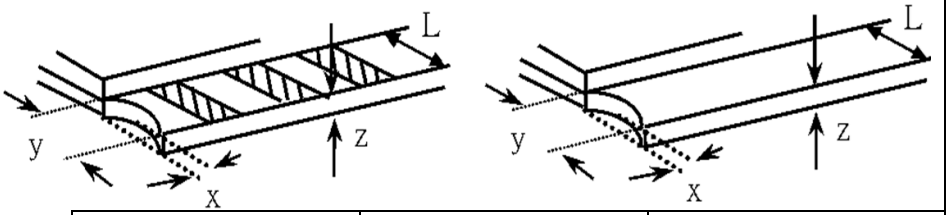

<table>
<tr><th>y: Chip width</th><th>x: Chip length</th><th>z: Chip thickness</th></tr>
<tr><td>y≦ L</td><td>x≦1/8a</td><td>0 ＜ z ≦ t</td></tr>
</table>
⊙If the chipped area touches the ITO terminal, over 2/3 of the ITO must remain and be inspected according to electrode terminal specifications.
⊙If the product will be heat sealed by the customer, the alignment mark not be damaged.
6.2.3 Substrate protuberance and internal crack.
<table>
<tr><th>y: width</th><th>x: length</th></tr>
<tr><td>y≦1/3L</td><td>x ≦ a</td></tr>
</table>
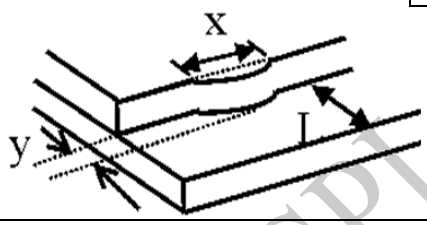
</td><td>2.5</td></tr>
<tr><td>07</td><td>Cracked glass</td><td>The OLED with extensive crack is not acceptable.</td><td>2.5</td></tr>
<tr><td>08</td><td>Backlight elements</td><td>8.1 Illumination source flickers when lit.
8.2 Spots or scratched that appear when lit must be judged. Using OLED spot, lines and contamination standards.
8.3 Backlight doesn’t light or color wrong.</td><td>0.65
2.5

0.65</td></tr>
<tr><td>09</td><td>Bezel</td><td>9.1 Bezel may not have rust, be deformed or have fingerprints, stains or other contamination.
9.2 Bezel must comply with job specifications.</td><td>2.5

0.65</td></tr>
<tr><td>10</td><td>PCB , COB</td><td>10.1 COB seal may not have pinholes larger than 0.2mm or contamination.
10.2 COB seal surface may not have pinholes through to the IC.
10.3 The height of the COB should not exceed the height indicated in the assembly diagram.
10.4 There may not be more than 2mm of sealant outside the seal area on the PCB. And there should be no more than three places.
10.5 No oxidation or contamination PCB terminals.
10.6 Parts on PCB must be the same as on the production characteristic chart. There should be no wrong parts, missing parts or excess parts.
10.7 The jumper on the PCB should conform to the product characteristic chart.
10.8 If solder gets on bezel tab pads, OLED pad, zebra pad or screw hold pad, make sure it is smoothed down.</td><td>2.5

2.5
0.65

2.5

2.5
0.65

0.65

2.5</td></tr>
</table>

WINSTAR DISPLAY Co., Ltd.

WINSTAR DISPLAY Co., Ltd.

NO	Item	Criterion	AQL
11	Soldering	11.1 No un-melted solder paste may be present on the PCB. 11.2 No cold solder joints, missing solder connections, oxidation or icicle. 11.3 No residue or solder balls on PCB. 11.4 No short circuits in components on PCB.	2.5 2.5 2.5 0.65
12	General appearance	12.1 No oxidation, contamination, curves or, bends on interface Pin (OLB) of TCP. 12.2 No cracks on interface pin (OLB) of TCP. 12.3 No contamination, solder residue or solder balls on product. 12.4 The IC on the TCP may not be damaged, circuits. 12.5 The uppermost edge of the protective strip on the interface pin must be present or look as if it cause the interface pin to sever. 12.6 The residual rosin or tin oil of soldering (component or chip component) is not burned into brown or black color. 12.7 Sealant on top of the ITO circuit has not hardened. 12.8 Pin type must match type in specification sheet. 12.9 OLED pin loose or missing pins. 12.10 Product packaging must the same as specified on packaging specification sheet. 12.11 Product dimension and structure must conform to product specification sheet.	2.5 0.65 2.5 2.5 2.5 2.5 2.5 0.65 0.65 0.65 0.65

WINSTAR DISPLAY Co., Ltd.

Check Item	Classification	Criteria
No Display	Major	
Missing Line	Major	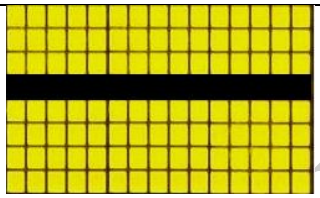 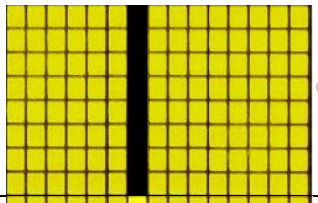
Pixel Short	Major	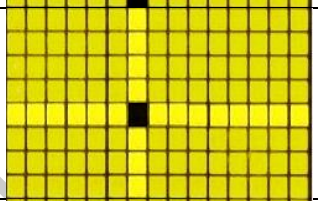
Darker Short	Major	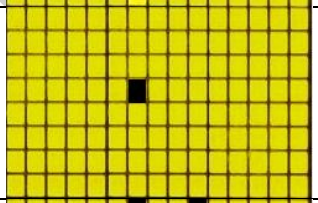
Wrong Display	Major	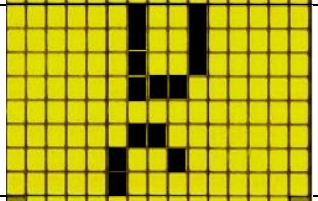
Un-uniform B/A x 100% < 70% A/C x 100% < 70%	Major	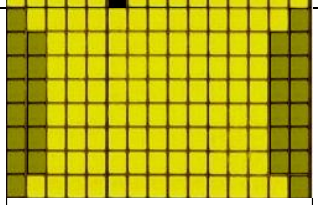

WINSTAR DISPLAY CO., Ltd.

11.Precautions in use of OLED Modules

Modules

(1) Avoid applying excessive shocks to module or making any alterations or modifications to it.
(2) Don't make extra holes on the printed circuit board, change the components or modify its shape of OLED display module.
(3) Don't disassemble the OLED display module.
(4) Do not apply input signals while the logic power is off.
(5) Don't operate it above the absolute maximum rating.
(6) Don't drop, bend or twist OLED display module.
(7) Soldering: only to the I/O terminals.
(8) Hot-Bar FPC soldering condition: 280~350C, less than 5 seconds.
(9) Winstar has the right to change the passive components (Resistors, capacitors and other passive components will have different appearance and color caused by the different supplier.) and change the PCB Rev. (In order to satisfy the supplying stability, management optimization and the best product performance...etc, under the premise of not affecting the electrical characteristics and external dimensions, Winstar have the right to modify the version.)
(10) Winstar has the right to upgrade or modify the product function.

11.1. Handling Precautions

(1) Since the display panel is being made of glass, do not apply mechanical impacts such as dropping from a high position.
(2) If the display panel is broken by some accident and the internal organic substance leaks out, be careful not to inhale nor lick the organic substance.
(3) If pressure is applied to the display surface or its neighborhood of the OLED display module, the cell structure may be damaged. So, be careful not to apply pressure to these sections.
(4) The polarizer covering the surface of the OLED display module is soft and easily scratched.
(5) When the surface of the polarizer of the OLED display module has soil, clean the surface. It takes advantage by using following adhesion tape.
* Scotch Mending Tape No. 810 or an equivalent
Never try to breathe upon the soiled surface nor wipe the surface using cloth containing solvent such as ethyl alcohol, since the surface of the polarizer will become cloudy.
Also, pay attention that the following liquid and solvent may spoil the polarizer:
* Water
* Ketone
* Aromatic Solvents
(6) Protection film is being applied to the surface of the display panel and removes the protection film before assembling it. At this time, if the OLED display module has been stored for a long period of time, residue adhesive material of the protection film may remain on the surface of the display panel after removed of the film. In such case, remove the residue material by the method introduced in the above Section 5.
(7) Do not touch the following sections whenever possible while handling the OLED display modules.
* Pins and electrodes
* Pattern layouts such as the TCP & FPC
(8) Hold OLED display module very carefully when placing OLED display module into the System housing. Do not apply excessive stress or pressure to OLED display module. And, do not over bend the film with electrode pattern layouts. These stresses will influence the

WINSTAR DISPLAY Co.,Ltd.

display performance. Also, secure sufficient rigidity for the outer cases.

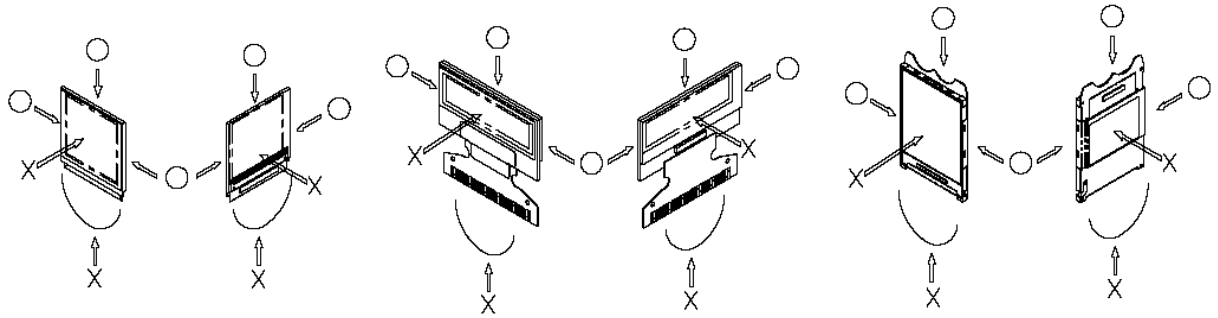

(9) Do not apply stress to the LSI chips and the surrounding molded sections.

(10) Pay sufficient attention to the working environments when handing OLED display modules to prevent occurrence of element breakage accidents by static electricity.
* Be sure to make human body grounding when handling OLED display modules.
* Be sure to ground tools to use or assembly such as soldering irons.
* To suppress generation of static electricity, avoid carrying out assembly work under dry environments.
* Protective film is being applied to the surface of the display panel of the OLED display module. Be careful since static electricity may be generated when exfoliating the protective film.

11.2. Storage Precautions

(1) When storing OLED display modules, put them in static electricity preventive bags to avoid be directly exposed to sun or lights of fluorescent lamps. (We recommend you to store these modules in the packaged state when they were shipped from Winstar. At that time, be careful not to let water drops adhere to the packages or bags.)

(2) When the OLED display module is being dewed or when it is placed under high temperature or high humidity environments, the electrodes may be corroded if electric current is applied. Please store it in clean environment.

11.3. Designing Precautions

(1) The absolute maximum ratings are the ratings which cannot be exceeded for OLED display module, and if these values are exceeded, OLED display module may be damaged.

(2) To prevent occurrence of malfunctioning by noise, pay attention to satisfy the VIL and VIH specification and to make the signal line cable as short as possible.

(3) We recommend you to install excess current preventive unit (fuses, etc.) to the power circuit (VDD / VCC). (Recommend value: 0.5A)

(4) Pay sufficient attention to avoid occurrence of mutual noise interference with the nearby devices.

(5) As for EMI, take necessary measures on the equipment side basically.

(6) If the power supplied to the OLED display module is forcibly shut down by such errors as taking out the main battery while the OLED display panel is in operation, we cannot guarantee the quality of this OLED display module.
* Connection (contact) to any other potential than the above may lead to rupture of the IC.

(7) If this OLED driver is exposed to light, malfunctioning may occur and semiconductor elements may change their characteristics.

(8) The internal status may be changed, if excessive external noise enters into the module. Therefore, it is necessary to take appropriate measures to suppress noise generation or to protect module from influences of noise on the system design.

WINSTAR DISPLAY Co., Ltd.

(9) We recommend you to make periodical refreshment of the operation statuses (re-setting of the commands and re-transference of the display data) to cope with catastrophic noise.

(10) It's pretty common to use "Screen Saver" to extend the lifetime and Don't use the same image for long time in real application. When an OLED display module is operated for a long of time with fixed pattern, an afterimage or slight contrast deviation may occur.

(11) The limitation of FPC and Film bending.

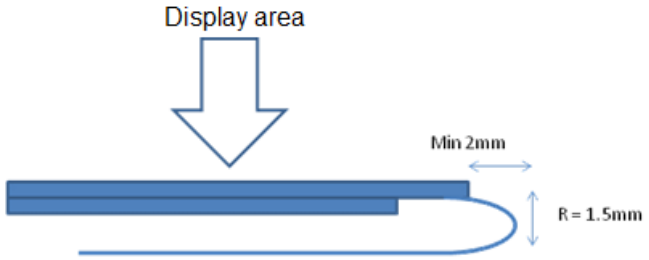

(12) The module should be fixed balanced into the housing, or the module may be twisted.

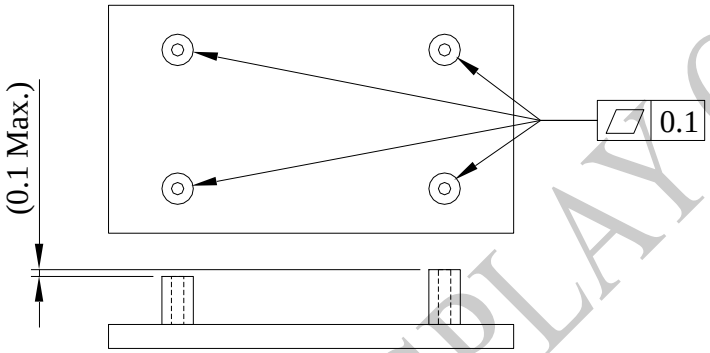

(13) Please heat up a little the tape sticking on the components when removing it; otherwise the components might be damaged.

11.4. Precautions when disposing of the OLED display modules

(1) Request the qualified companies to handle industrial wastes when disposing of the OLED display modules. Or, when burning them, be sure to observe the environmental and hygienic laws and regulations.

WINSTAR DISPLAY Co., Ltd.